O&M MANUAL

Class II Auxiliary Circuit Transformers

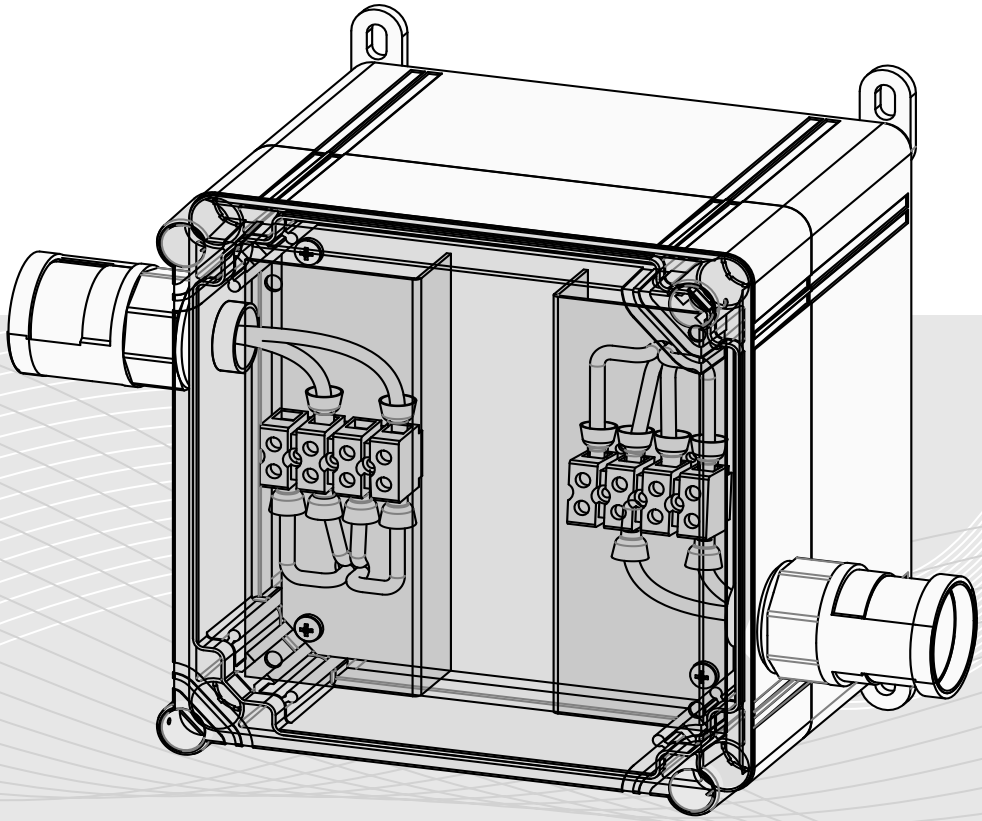

- 650/110VAC
- 230/110VAC
- 400-415-440/110V
- 650/230VAC
- 230/230VAC

English

Doc Ref TECH171 Issue 2

CONTENTS

CONTENTS

Historic Revisions - Document Reference 151 [Superseded]

Version	Implemented By	Revision Date	Approved By	Approval Date	Reason
1	B.M.	09/11/15	N.D.H.	17/12/15	O&M Manual Creation
2	B.M.	01/04/16	N.D.H.	04/04/16	Additional Data Added

Historic Revisions - TECH171

Version	Implemented By	Revision Date	Approved By	Approval Date	Reason
1	C.J.W.	30/04/20	N.D.H.	30/04/20	Additional Data Added & New Layout Implemented
2	C.J.W.	18/05/20	N.D.H.	18/05/20	Additional Network Rail PAD's Accepetance Numbers Added

1. INTRODUCTION
1.1 SAFETY NOTES

SAFETY PRECAUTIONS	
GENERAL	The need for Personal Protection Equipment (PPE) must be assessed prior to undertaking installation or maintenance operations.
HEAVY EQUPMENT	All manual handling must be in accordance with the Manual Handling Operations Regulation 1992
LETHAL VOLTAGES	Electrical power within this system/equipment is at a level considered, by the low voltage directive 73/23/EEC, to be sufficient to kill. Always assume conductors are live until proved dead. Before attempting any maintenance task, ensure that equipment is isolated from electrical supply. When the electrical supply cannot be isolated, testing/maintenance tasks are to be undertaken only by personnel who are aware of the dangers involved and after all necessary precautions have been taken.
WORKING PRACTICES	Unauthorized interruption of the system may endanger the safe operation of the railway. Before attempting any maintenance on the equipment, obtain the necessary permission from the relevant authority. Ensure the consequence of any interruption has been fully considered and understood. If a component or equipment becomes overheated or burnt, a toxic fume hazard may exist. Isolate the power to the equipment, ventilate the area and allow the equipment time to cool before carrying out repairs. This equipment does not liberate any toxic or injurious gases during normal operation. When working on equipment, especially in the confines of a case, do not wear metal rings, bracelets, watches, etc. These articles can cause personal injury or damage to equipment by becoming entangled in components or causing a short circuit.

1.2 PURPOSE

This O&M Manual defines the operating & Installation guidelines for the ATL Transformers, 10 - 150VA range of copper 650/110V auxiliary transformer ranges for use within a standard Network Rail approved Principal Supply Point.

1.3 GUARANTEE

The function and safety of the equipment is only guaranteed if the warning and safety instructions included in this manual are adhered to.

ATL Transformers Ltd is not liable for any personal injury or damage to property that occurs as a result of the warning and manual being disregarded.

ATL Transformers Ltd does not accept any liability or warranty for damage due to the use of non-approved spare parts and accessories.

2. PRODUCT DESCRIPTION

2.1 KEY ECO-RAIL® AUXILIARY CIRCUIT TX FEATURES

The enclosed transformer fits inside a standard Network Rail Apparatus Housing. The transformers have an ingress protection rating greater than IP54.

Primary and Secondary Class II terminals are housed and separated within a double insulated enclosure and feature a protective inspection cover which enables cables to be traced from the point of entry and inspection of Class II terminals under load.

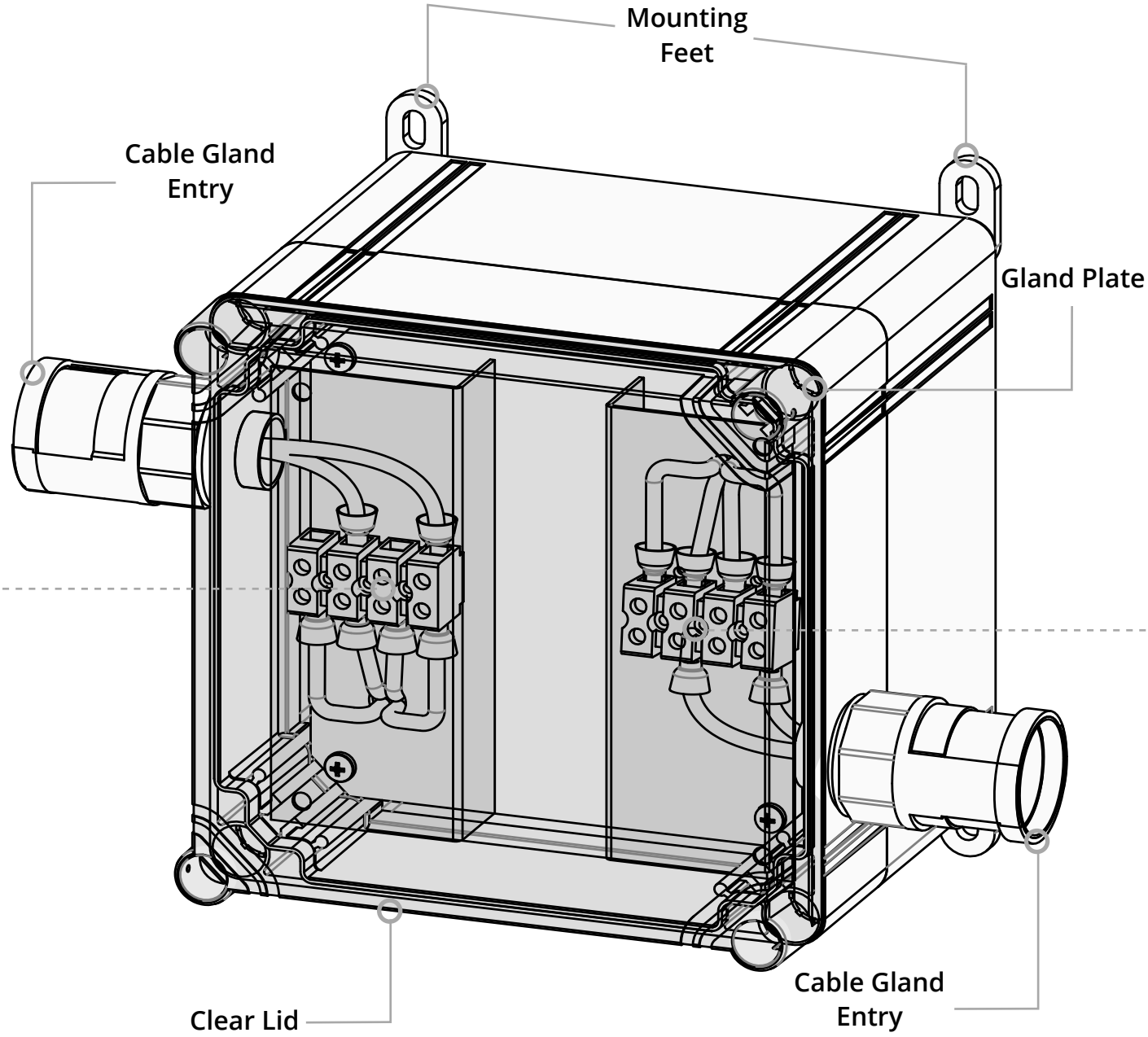

Primary Class II Terminals
Remove gland plate to for cable entry for Class II Primary Connections

Secondary Class II Terminals
Remove gland plate to for cable entry for Class II Secondary Connections

2.2 PRODUCT OPERATION

- The Fully Class II TX is designed to be fed from two wires of 650VAC (± 10%) Supply at a nominal 50Hz (+ 4% to – 6%).
- The 650 VAC Class II supply cables are to be connected within the double insulated compartment through an M20 straight or angled insulated coupling meeting Class II requirements.
- The 110 VAC Class II output cables are connected to the transformer through an insulated M25 cable gland and terminated to the provided terminal blocks which are designed to accept a cable size between 0.5 –6mm2 .

3. PRODUCT INSTALLATION
3.1 MOUNTING WITHIN APPARATUS HOUSING

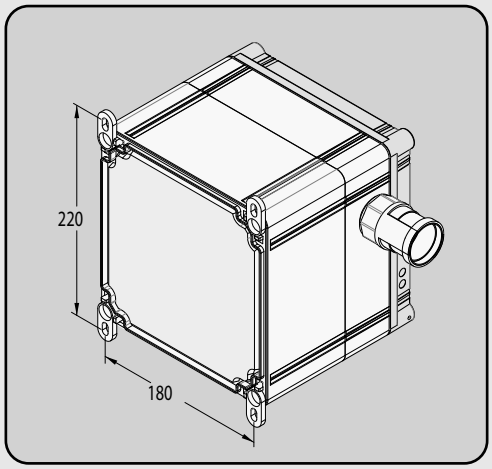

1. Dimensioning

The transformers shown in the general arrangement drawings in Appendix A are designed to be securely fixed to substantial mounting rails or brackets such as BRS SM 440 bar work. The bar work should be capable of bearing the weight of the transformer using the slots shown in Appendix A. The enclosure can be rotated 90° to have the cable glands/couplings on a vertical axis rather than a horizontal axis.

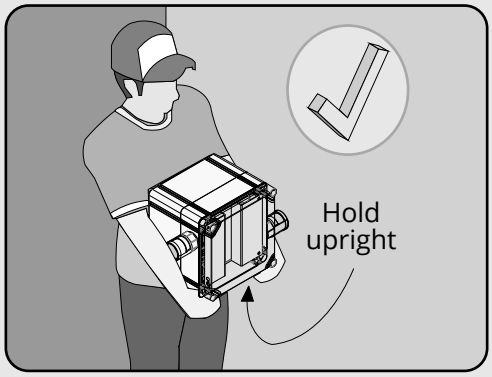

2. Lifting

Safe lifting practices should be observed when handling transformers. These units can be lifted by hand and held in the upright position shown in the illustration. Before lifting ensure lid and other parts are corrrectly fastened. Please refer to weights in Appendix A before lifting.

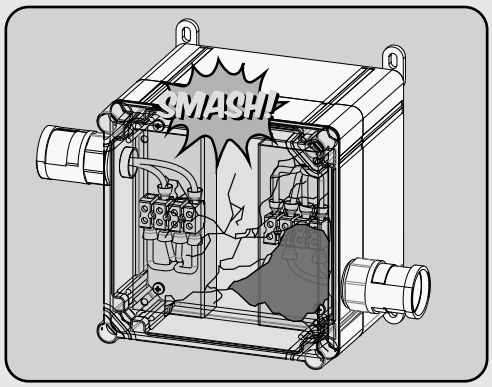

3. Repercussions

Due diligence and care should be taken not to damage any installed cable entry glands or couplings during the installation process as this could compromise the safety integrity of the unit. It's not recommended to use cable glands/couplings as handles. Dropping the unit can cause damage to the polycarbonate lid and can sratch/ chip fiberglass reinforced polycarbonate base.

3.2 CABLE CONNECTION

After removing the enclosure lid and terminal covers.

WARNING

Ensure supply is Isolated before removing the Lid. Ensure that the Lid are bolted back on before exerting power supply.

- Primary: Through removable blanking glands provided directly onto secondary terminals.
- Secondary: Through removable blanking glands provided directly onto secondary terminals.

3.3 VOLTAGE ADJUSTMENT

INPUT: Monitor the supply voltage with a calibrated DVM and take an average value over 3 minutes. Connect supply to the nearest input voltage terminal provided i.e. if the monitored voltage average RMS value over 3 minutes is 648 VAC then connect to the input terminals T650 and T0 respectively.
OUTPUT: The output terminals facilitate fine voltage adjustment and the relevant terminal should be used to achieve an output voltage of 110V ± 5% under load. Ensure that the output voltage is achieved within the range of ± 5%.

4. PRODUCT MAINTENANCE

4.1 ROUTINE MAINTENANCE

These units are non-serviceable and require observational maintenance only, specifically to their Class II terminals and protective covers that must be intact and installed as originally supplied. This does not supersede any maintenance tasks or scheduling Procedures Network Rail deem necessary.

Each unit is provided with a serial number and part code reference. This
Information is located on the transformer rating plate and should be quoted at any
Point where the unit is examined and suspected to be compromised.

4.2 TESTING IN SERVICE

Disconnect incoming supply and secondary connections.

Using a calibrated 500V d.c. insulation resistance tester check insulation resistance. Primary to body, secondary to body and primary to secondary.

All values should be greater than 7M ohms.

Check primary and secondary winding resistance with values on data sheet in Appendix A, and reconnect incoming supply to primary terminals.

Check incoming supply voltage, adjusting primary taps if necessary (using method specified in section 3.3).

Check primary tap voltages. Terminal voltages should be within 10% of the nominal 650VAC terminal voltage.

Reconnect secondary, and using a calibrated ammeter check the load current. The load current should not exceed the value shown on the data sheet in Appendix A.

Check secondary tap voltages.

Voltages should be within 5 % of the terminal voltage. Adjust secondary taps if necessary. Relevant safety checks & testing should be conducted in addition to these checks & in line with Network Rail's controlled safety & inspection procedures prior to energizing the transformer.

4.3 MAINTENANCE AFTER FLOODING

Please note that the transformer should be sent back to ATL Transformers if the transformer has sustained flooding

Please see section 7 of this document for contact details.

4.4 SPARE PARTS

No spare parts are available for this product, damaged units are to be replaced.

5. TRAINING & COMPETENCE

The transformers are to be installed within a Network Rail approved Structure by trained & authorized Network Rail installers only.

All maintenance activities shall be undertaken by trained and authorized Network Rail crews and/or contractors.

6. PRODUCT MAINTENANCE

6.1 DATA SHEET REFERENCE

Refer to manufacturers Datasheets for required specification.

6.2 NR COMPONENT APPROVALS

CUSTOMER	DECLARATION OF CONFORMITY
	NETWORK RAIL
PRODUCT NAME	FULLY CLASS II NON-CRITICAL AUX CIRCUIT FSP TRAS-FORMERS FOR NETWORK RAIL PRODUCT RANGE
ATL DATA SHEETS	AVAILABLE ON REQUEST: DOC REF TECH151
NETWORK RAIL CERTIFICATE(S)	PA 05/06353

6.3 DECLARATION OF CONFORMITY

ATL Transformers claim conformity for this family of product(s) manufactured at our Manchester facility. In accordance with the specifications referenced below. This declaration is based upon our technical file which contains data supporting our claims.

COMPLIANCE SPECIFICATION(S)	
EC Directives	2006/95/EC Low Voltage Directive
Harmonized Standards	BS EN 61558-1:2009
Internal Standards	ISO 9001: 2015 BSI Audited Quality Assurance
Customer Standards/Specifications	BS EN 61558-1:2009 - Safety of power transformers, power supplies, reactors and similar products
This declaration is made by: Mr. Neville D Haide (Company Director) ATL Transformers Ltd. Hanson Close, Middleton, Manchester, Lancashire, UK, M24 2HD	
Declaration by: N. Haide	Date 25/03/2015

7. MANUFACTURER CONTACTS

ATL Transformers Ltd
Hanson Close
Hanson Street
Middleton
Manchester
Lancashire
UK
M24 2HD

Tel: +44 (0) 161 653 0902 Monday – Thurs 08:00 – 17:15 Friday 8:00 – 13:00
Web: www.atltransformers.co.uk
Email: sales@atltransformers.co.uk

8. REGULATORY REQUIREMENTS
APPLICABLE STANDARDS

BS EN 50122-1 – Railway Applications – Fixed Applications – Part 1 Protective Provisions relating to Electrical Safety & Earthing.
BS EN 50125-2 – Railway applications. Environmental conditions for equipment. Fixed electrical installations.
BS EN 60529 – Degrees of protection provided by enclosures.
BS EN 61558 – Safety of power transformers, power supplies, reactors and Similar products.
BS EN 62262 – Degrees of protection provided by enclosures for electrical equipment against mechanical impacts (IK code).
NR/L1/ELP/27000 – Asset Management Policy for Electrical Power assets.
NR/GN/ELP/27315 – Management of Power Supplies for Telecoms Equipment.
NR/L2/SIGELP/27421 & 27422 - Flexible Conduits & Glands
NR/L2/ELP/21120 – E & P Records Management Process.
Low Voltage Directive 2006/95/EC. EMC Directive 2004/108/EC.

9. FREQUENTLY ASKED QUESTIONS

1) What tools are required to access the Transformer for termination?

WARNING

Ensure supply is Isolated before removing the Class II compartments Protective Cover. Never attempt to replace Nylon screws or fasteners with metal screws or fasteners.

- **To access Terminals:**
  To access Class II Terminals: Remove Inspection cover from double insulated compartment using Phillips head driver, secure cables into cable clamps and Terminate into the correct terminals using a Flat head terminal driver.

  If Ferrules are not being used cables should be stripped 10mm and secured Into the terminals. The recommended torque setting is between 2.0 – 4.0 Nm.

NOTE: - All enclosure covers/plates must be replaced after terminating cables to maintain protection.

All electrical termination is by flat head terminal driver.

Cables are connected directly onto the imput/output terminals inside of the enclosure underneath the class II segregated protective covers.

2) Where do I connect the cables?

- The cables are connected in the case of the Primary and secondary, to the terminals in the Double insulated compartment beneath individual Perspex guards within Class II compartments.

3) How do I gain access to the different sections of the assembly?

- This unit is designed to offer access to terminals only for installation purposes. Both Class II terminals are accessible via removable Class II cover and individual Perspex guards.

4) What is the procedure for installing & connecting cables?

- All cables shall be installed in accordance with NR Installation handbook.

5) Is there a start-up or switch on procedure?

- The assembly must be installed, commissioned & tested in accordance with NR Installation handbook by qualified person/s before power is applied to any part of the system.

6) The assembly is damaged or not functioning correctly, who shall I Contact for spare or replacement parts?

- Contact:
  ATL Transformers Ltd - details are given in section 7 of this document.

10. PRODUCT WARRANTY

These products are under ATL's standard warranty which is 12 months. Product warranty document is available upon request.

11. END OF LIFE DISPOSAL

All Electrical equipment must be disposed of in accordance with the Wee Directive 2002/96/EG.

End of life or completed equipment may be returned to ATL Transformers for Disposal or alternatively must be issued to a certified waste disposal vendor.

12. ECO-RAIL® AUXILIARY TRANSFORMER RANGE

- Table-12.1 650/110V 1ph Transformer Product Range

Part No.	Description	Catalogue No.
T3047	CLASS II AUXILIARY CIRCUIT TRANSFORMER 50VA	054/044062
T3045	CLASS II AUXILIARY CIRCUIT TRANSFORMER 100VA	054/044063
T3046	CLASS II AUXILIARY CIRCUIT TRANSFORMER 150VA	054/044064
T3044	CLASS II AUXILIARY CIRCUIT TRANSFORMER 250VA	054/044065

- Table-12.2 230/110V 1ph Transformer Product Range

Part No.	Description	Catalogue No.
T3527	CLASS II AUXILIARY CIRCUIT TRANSFORMER 50VA	0054/037215
T3531	CLASS II AUXILIARY CIRCUIT TRANSFORMER 100VA	0054/037216
T3535	CLASS II AUXILIARY CIRCUIT TRANSFORMER 150VA	0054/037217
T3539	CLASS II AUXILIARY CIRCUIT TRANSFORMER 250VA	0054/037218

- Table-12.3 400-415-440/110V 1ph Transformer Product Range

Part No.	Description	Catalogue No.
T3528	CLASS II AUXILIARY CIRCUIT TRANSFORMER 50VA	0054/037211
T3532	CLASS II AUXILIARY CIRCUIT TRANSFORMER 100VA	0054/037212
T3536	CLASS II AUXILIARY CIRCUIT TRANSFORMER 150VA	0054/037213
T3540	CLASS II AUXILIARY CIRCUIT TRANSFORMER 250VA	0054/037214

- Table-12.4 650/230V 1ph Transformer Product Range

Part No.	Description	Catalogue No.
T3529	CLASS II AUXILIARY CIRCUIT TRANSFORMER 50VA	0054/037207
T3533	CLASS II AUXILIARY CIRCUIT TRANSFORMER 100VA	0054/037208
T3537	CLASS II AUXILIARY CIRCUIT TRANSFORMER 150VA	0054/037209
T3541	CLASS II AUXILIARY CIRCUIT TRANSFORMER 250VA	0054/037210

- Table-12.5 230/230V 1ph Transformer Product Range

Part No.	Description	Catalogue No.
T3530	CLASS II AUXILIARY CIRCUIT TRANSFORMER 50VA	0054/037219
T3534	CLASS II AUXILIARY CIRCUIT TRANSFORMER 100VA	0054/037220
T3538	CLASS II AUXILIARY CIRCUIT TRANSFORMER 150VA	0054/037221
T3542	CLASS II AUXILIARY CIRCUIT TRANSFORMER 250VA	0054/037222

APPENDICES A
GENERAL ARRANGEMENTS

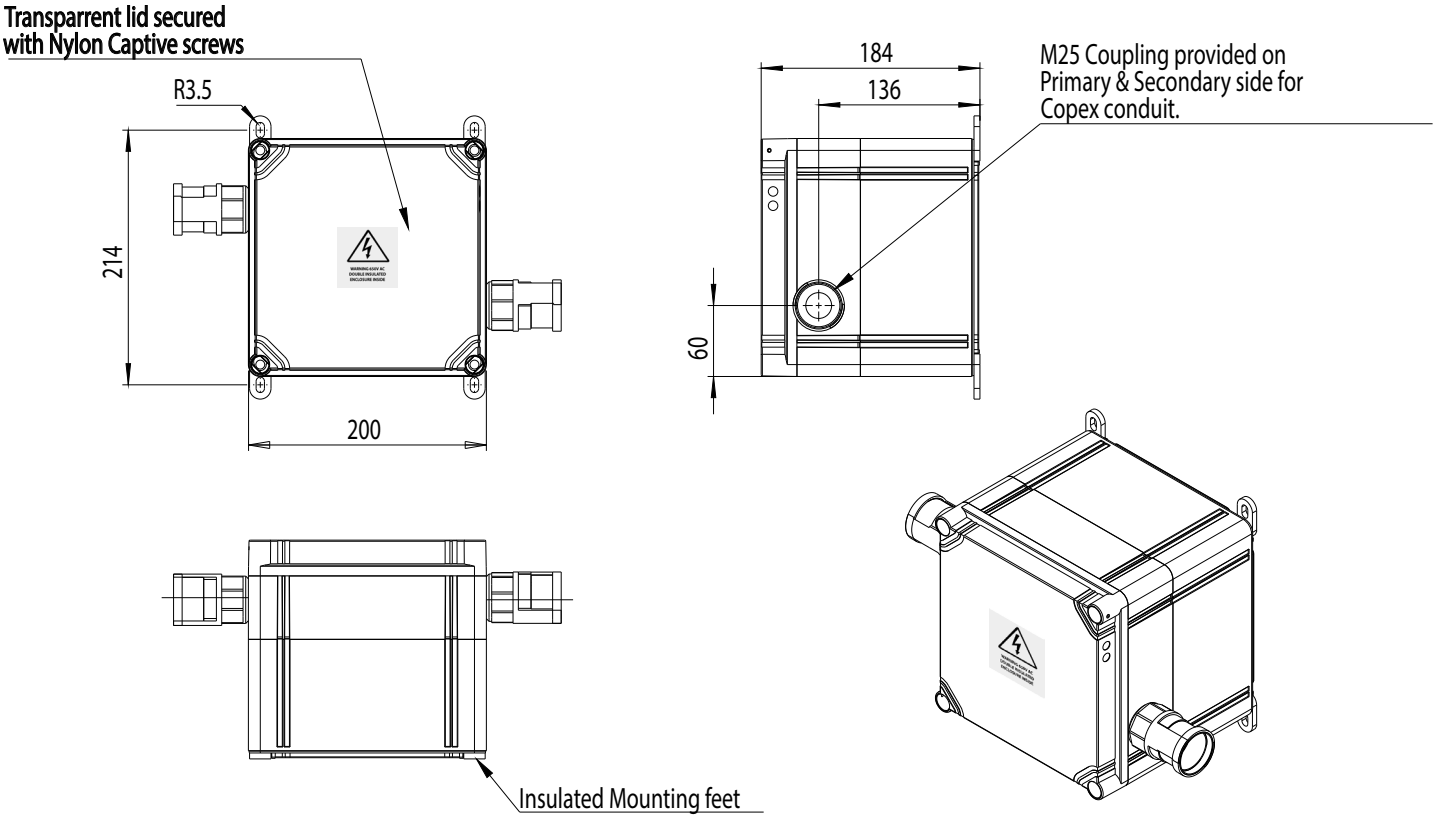

Auxiliary Circuit Transformers	
Model	Weight (kg)
	ALL VARIATIONS
50VA	5.30
100VA	6.12
150VA	6.80
250VA	8.20

APPENDICES B
LABEL DETAILS

LABEL 1

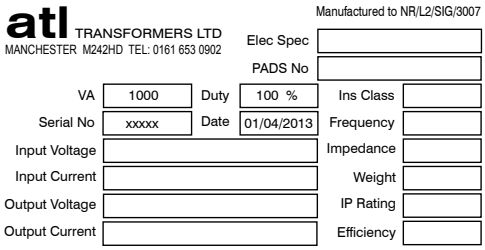

LABEL 2

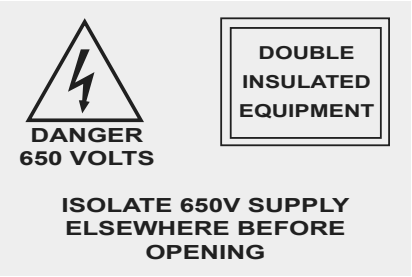

*EXAMPLE - 650V INPUT

LABEL 3

*EXAMPLE - 650V INPUT

LABEL 4

*EXAMPLE - 110V OUTPUT

LABEL 5

LABEL 6

Label	Description	Location
1	Electrical Specification Rating Plate	Enclosure Base- Front
2	Danger - Isolate Supply	Enclosure Lid
3	Danger - Isolate Power Before Removing Cover	Class II Perspex Guards
4	Terminal ID Markers (Input & Output)	Backplate
5	CE Mark	Enclosure Lid
6	Tested Label - Date & Initials	Transformer

APPENDICES C
WIRING DIAGRAMS

Title	Descritpion	Diagram
650/110V AUX COPPER	**1ph Auxiliary Transformer** Generic Wiring Diagram T3044 T3045 T3046 T3047	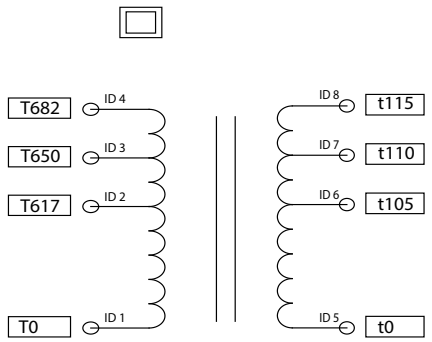
230/110V AUX COPPER	**1ph Auxiliary Transformer** Generic Wiring Diagram T3527 T3531 T3535 T3539	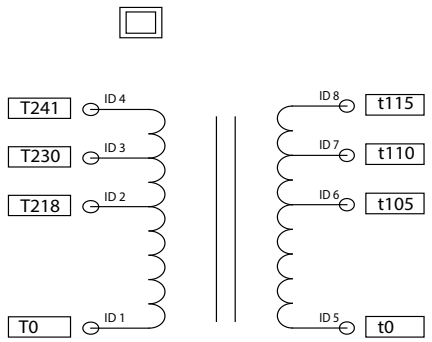
400-415-440/110V AUX COPPER	**1ph Auxiliary Transformer** Generic Wiring Diagram T3528 T3532 T3536 T3540	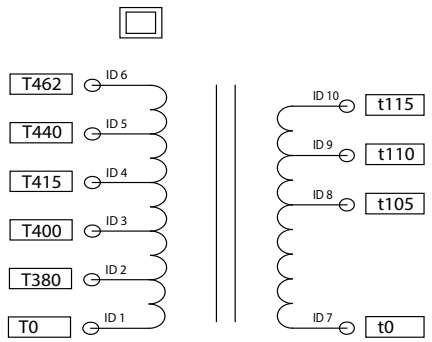
650/230V AUX COPPER	**1ph Auxiliary Transformer** Generic Wiring Diagram T3529 T3533 T3537 T3541	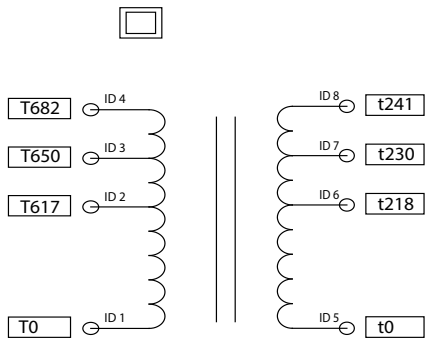
230/230V AUX COPPER	**1ph Auxiliary Transformer** Generic Wiring Diagram T3530 T3534 T3538 T3542	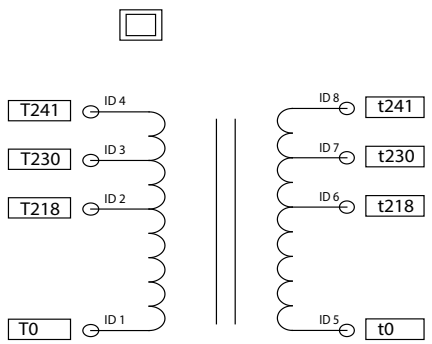

Single Phase Transformers

Three Phase Transformers

Solutions for Rail

DC Chokes

Specialist Assemblies

Power Supplies

Control Gear

ATL Transformers Ltd, Hanson Close, Middleton, Manchester M24 2HD
Tel.: +44(0)161 653 0902 ● Fax: +44(0)161 653 4744
sales@atltransformers.co.uk ● www.atltransformers.co.uk

