TRANSFORMERS FOR RAIL
DATASHEET BROCHURE

The Eco-rail® range offers considerably lower power consumption when compared with conventional transformers both within the existing class I and class II earth less systems. The range offers both copper or aluminium in a multitude of variations.

©ATL Transformers Ltd 2024, All Rights Reserved

Document Ref: TECH 151 Issue 15

Contents

Rail Signalling Transformers & Point Drive Rectifiers

Introduction	6-7
Data Specification - Aluminium Single Output 650/110V	8
Data Specification - Aluminium Multi Output 650/110V	9
Data Specification - Aluminium Single Output 230/110V	10
Data Specification - Aluminium Multi Output 230/110V	11
Data Specification - Aluminium Single Output 400-415-440/110V	12
Data Specification - Aluminium Multi Output 400-415-440/110V	13
Data Specification - Aluminium Single Output 650/230V	14
Data Specification - Aluminium Multi Output 650/230V	15
Data Specification - Aluminium Single Output 230/230V	16
Data Specification - Aluminium Multi Output 230/230V	15
Data Specification - Copper Single Output 650/110V	18
Data Specification - Copper Single Output 230/110V & 400-415-440/110V	19
Data Specification - Copper Single Output 650/230V & 230/230V	20
Data Specification - Transformer Rectifiers for Point Drive Systems 650/120VDC	21
Data Specification - Transformer Rectifiers for Point Drive Systems 230/120VDC	22
Data Specification - Transformer Rectifiers for Point Drive Systems 400-415-440/120VDC	23
Wiring Diagrams - 250VA-10KVA - Copper / Aluminium Transformers	24-33
Additional Items - Legacy Brackets	33
Wiring Diagrams - Multi Output Configurations for Quad Output Transformers	34-35
General Arrangements - 250VA-10KVA Aluminium & Copper Wound Transformers	36
General Arrangements - 2.5A-10A Transformer Rectifiers for Point Drive Systems	37
General Arrangement - 10KVA Aluminium Wound Transformer	38
Certification of Acceptance - PA05/06391	39
Certification of Acceptance - PA05/05761	40
Certification of Acceptance - PA05/06329	41

Principal Supply Point (PSP) Transformers

Introduction	44-47
Data Specification - Aluminium 400/650V Bi-Phase	48-49
Data Specification - Aluminium 230/650V Bi-Phase	50-51
Data Specification - Aluminium 650/650V Bi-Phase	52-53
Data Specification - Aluminium 400/230V Bi-Phase	54-55
Data Specification - Aluminium 230/230V Bi-Phase	56-57
Data Specification - Aluminium 650/230V Bi-Phase	58-59
Data Specification - General Arrangements for Single Phase IP32	60
Data Specification - General Arrangements for Single Phase IP56	61
Data Specification - Aluminium 400/650V Three Phase Dyn11	62-63
Data Specification - Aluminium 400/650V Three Phase Dd0	64-65
Data Specification - Aluminium 400/650V Three Phase Yd11	66-67
General Arrangements for Three Phase IP32	68

General Arrangements for Three Phase IP56	69
Certification of Acceptance - PA05/06391	70-71

Distribution Interface Transformer Assembly (DITA)

Introduction	74-75
Data Specification - Aluminium Single Output 650/650V	76
Details for Other Voltage Variants	77
General Arrangements - 5-40KVA DITA	78
Certification of Acceptance - PA05/06592	79

Auxiliary Circuit Transformers (AUX)

Introduction	82-83
Data Specification - Copper 650/110V 50-250VA	84
Data Specification - Copper 230/110V 50-250VA	85
Data Specification - Copper 400-415-440/110V 50-250VA	86
Data Specification - Copper 650/230V 50-250VA	87
Data Specification - Copper 230/230V 50-250VA	88
General Arrangements - 50-250VA Auxiliary Circuit Transformers	89
Certification of Acceptance - PA05/06353	90

Comming Soon

Points Heating Transformers (PHT's)	-

*** Please contact us if you would like to be notified when this product range is available**

Aluminium FSP
Signalling Transformers
Network Rail Accepted
Product: PA05/07022

Copper FSP
Signalling Transformers
Network Rail Accepted
Product: PA05/05761

DATASHEET BROCHURE

Rail Signalling Transformers & Point Drive Transformer Rectifiers

The Eco-rail® range offers considerably lower power consumption when compared with conventional transformers both within the existing class I and class II earth less systems. The range offers both copper or aluminium in a multitude of variations.

Copper FSP
Point Drive Rectifiers

Network Rail Accepted
Product: PA05/06329

Rail Signal Transformers

Contribution to safeguarding the environment for our future generations by way of ultra efficient transformer technology is a relatively untapped resource and we believe that we should play a significant role in reducing the wasted energy generated by our electrical power industries and distribution systems.

ATL is developing and deploying ultra efficient transformer solutions to the industry and we are proud to offer our NG (New generation) eco-rail® range of transformers specifically designed to reduce the wasted power consumption of Network rail signalling transformers within the supply FSP (functional supply point) equipment by up to 45%.

eco - rail®

KEY FEATURES

•Class II Hybrid and Class I system Compatibility.
•Smallest & lightest in their class.
•Ultra High efficiencies > 97%, reducing carbon emissions & environmental impact.
• Low Standby Losses –up to 62.% Reduction in wasted energy.
•Reduced Full-Load losses –up to 45% Reduction.
•1 million hours Maintenance and Service Free Operation
•Ultra-Low Inrush Current – As low as 1.5 times full load current.
•A stable of single and multi output configurations for multi-regional UK distribution voltages and system topologies.

Aluminium range offering (all above and below):

•30% reduction in cost and weight
•Multi Zone Cable Access for efficient installation.
•ATL's Lightweight aluminium windings and connection technology eradicate the use of expensive and fast exhausting copper reserves to support sustainability.

Class I & Class II Rated

- Class II compartment inside the enclosure
- Class I terminals housed inside the enclosure

Light Weight

Light weight and compact the eco-rail® range is the smallest and the lightest in their class.

Legacy Brackets

Legacy brackets available for hassle free installation where legacy back plate installation is required particularly SIN scheme renewals reducing loading stresses on old timber backplates typically found in legacy signalling location cases reducing fatigue installers

4 Simple Steps

1) Align the template, ensuring it's straight with the backplate and using masking tape, tape the template to the backplate.
2)Drill the holes marked on the drill template
3) Fix the brackets using the required bolts.
4) Place the enclosure on the brackets and bolt the enclosure using the required bolts.

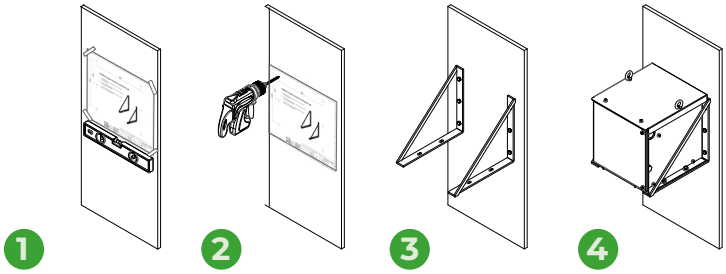

Efficiency & Economical Factors

All of our eco-rail® transformers have very high efficiencies, chart 1 below show the efficiencies of the ecorail copper wound transformers and chart 2 shows equivalent product efficiencies against the eco-rail® range.

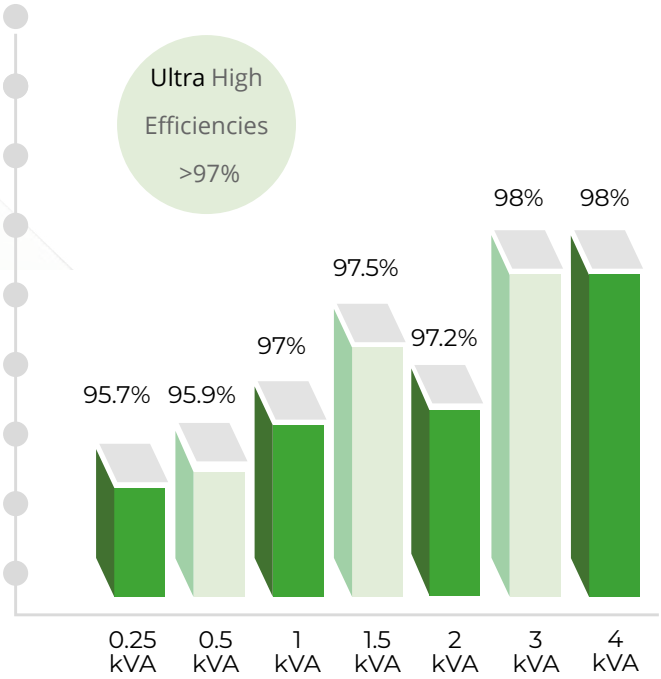

Our range of eco-rail® transformers deliver high efficiencies of up to >97%.

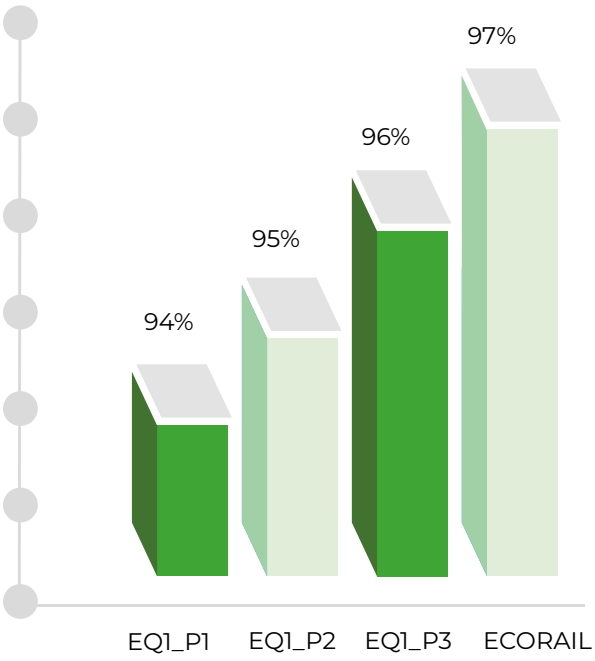

All of our ecoRail® transformers have very high efficiencies. For example, our 1KVA eco-rail® transformer has 97% efficiency while a 1KVA equivalent product has 94% efficiency

Data Specification

Aluminium Wound 650/110V
Single Output FSP Transformers

	Model	1000VA	1500VA	2000VA	3000VA	5000VA	10,000VA
	Electrical Specification	**T2966**	**T3065**	**T2967**	**T2968**	**T2969**	**T3149**
	PAD's Number	**091/049118**	**091/049119**	**091/049120**	**091/049121**	**091/049122**	**091/000067**
Equipment Classification	Primary Winding Classification	Class II	Class II	Class II	Class II	Class II	Class II
	Secondary Winding Classification	Class I	Class I	Class I	Class I	Class I	Class I
	Winding conductor	Aluminium	Aluminium	Aluminium	Aluminium	Aluminium	Aluminium
Input	Primary rated voltage (V)	650	650	650	650	650	650
	Primary taps (VAC)	617 –**650**– 682	617 –**650**– 682	617 –**650**– 682	617 –**650**– 682	617 –**650**– 682	617 –**650**– 682
	Recommended Primary fuse protection	4A BS88 & 10x38 gG IEC 60269-1&2	4A BS88 & 10x38 gG IEC 60269-1&2	6A BS88 & 10x38 gG IEC 60269-1&2	10A BS88 & 10x38 gG IEC 60269-1&2	16A BS88 & 10x38 gG IEC 60269-1&2	25 A BS88 & 10x38 gG IEC 60269-1&2
	% efficiency	>96	>96	>97	>97	>97	>97
	Inrush (x times rated current)	<5	<4	<4	<7	<4	<6
	% impedance	<4	<5	<5	<5	<5	<4
	X/R ratio	0.5	0.9	1.0	0.9	1.6	0.8
Output	Secondary rated voltage (V)	110	110	110	110	110	110
	Secondary taps (VAC)	0–105 –**110** – 115	0–105 –**110** – 115	0–105 –**110** – 115	0–105 –**110** – 115	0–105 –**110** – 115	0–105 –**110** – 115
	Rating (VA)	1000	1500	2000	3000	5000	10,000
	% Regulation	<4	<4	<3	<3	<3	<3
	Insulation Resistance (Ω)	Primary to Core *>100M Ω* Secondary to Core *>100M Ω* Primary to Secondary *>100M Ω*	Primary to Core *>100M Ω* Secondary to Core *>100M Ω* Primary to Secondary *>100M Ω*	Primary to Core *>100M Ω* Secondary to Core *>100M Ω* Primary to Secondary *>100M Ω*	Primary to Core *>100M Ω* Secondary to Core *>100M Ω* Primary to Secondary *>100M Ω*	Primary to Core *>100M Ω* Secondary to Core *>100M Ω* Primary to Secondary *>100M Ω*	Primary to Core *>100M Ω* Secondary to Core *>100M Ω* Primary to Secondary *>100M Ω*
	Full load losses (Watts)	42.2	60.12	63.9	94.14	136.23	332.7
	No load losses (Watts)	10.66	14.0	11.37	17.27	25.03	121.1
	Weight (kg)	22	26	33	38	65	139

Data Specification

Aluminium Wound 650/110V
Multi Output FSP Transformers

Model		1000VA Dual Output	1400VA Quad Output (110 - 135V)	1400VA Quad Output (110 - 140V)	2000VA Quad Ouput
Electrical Specification		**T3073**	**T3074**	**T3074-2**	**T3075**
PAD's Number		**091/049123**	**091/049154**	**0091/045795**	**0091/049124**
Equipment Classification	Primary Winding Classification	Class II	Class II	Class II	Class II
	Secondary Winding Classification	Class I	Class I	Class I	Class I
	Winding conductor	Aluminium	Aluminium	Aluminium	Aluminium
Input	Primary rated voltage (V)	650	650	650	650
	Primary taps (VAC)	617 – **650** – 682	617 – **650** – 682	617 – **650** – 682	617 – **650** – 682
	Recommended Primary fuse protection	4A BS88 & 10x38 gG IEC 60269-1&2	4A BS88 & 10x38 gG IEC 60269-1&2	4A BS88 & 10x38 gG IEC 60269-1&2	6A BS88 & 10x38 gG IEC 60269-1&2
	% efficiency	>96	>96	>96	>96
	Inrush (x times rated current)	<2	<2	<2	<6
	% impedance	<4	<5	<5	<4
	X/R ratio	0.4	0.6	0.6	0.6
Output	Secondary rated voltage (V)	110 110	110 110 110 110	110 110 110 110	110 110 110 110
	Secondary taps (VAC)	0–105–**110**–115 0–105–**110**–115	0–105–**110**–115-135 0–105–**110**–115-135 0–105–**110**–115-135 0–105–**110**–115-135	0–105–**110**–115-140 0–105–**110**–115-140 0–105–**110**–115-140 0–105–**110**–115-140	0–105–**110**–115 0–105–**110**–115 0–105–**110**–115 0–105–**110**–115
	Rating (VA)	1000	1400	1400	2000
	% Regulation	<4	<4	<4	<4
	Insulation Resitance (Ω)	Primary to Core *>100M Ω* Secondary to Core *>100M Ω* Primary to Secondary *>100M Ω*	Primary to Core *>100M Ω* Secondary to Core *>100M Ω* Primary to Secondary *>100M Ω*	Primary to Core *>100M Ω* Secondary to Core *>100M Ω* Primary to Secondary *>100M Ω*	Primary to Core *>100M Ω* Secondary to Core *>100M Ω* Primary to Secondary *>100M Ω*
Full load losses (Watts)		47.1	64.99	64.99	82.13
No load losses (Watts)		13.91	15.01	15.01	13.13
Weight (kg)		24	30	30	32

Data Specification

Aluminium Wound 230/110V
Single Output FSP Transformers

	Model	1000VA	1500VA	2000VA	3000VA	5000VA	10,000VA
	Electrical Specification	**T3359**	**T3363**	**T3367**	**T3371**	**T3379**	**T3383**
	PAD's Number	**0091/044321**	**0091/044322**	**0091/044323**	**0091/044324**	**0091/044325**	**0091/044326**
Equipment Classification	Primary Winding Classification	Class II	Class II	Class II	Class II	Class II	Class II
	Secondary Winding Classification	Class I	Class I	Class I	Class I	Class I	Class I
	Winding conductor	Aluminium	Aluminium	Aluminium	Aluminium	Aluminium	Aluminium
Input	Primary rated voltage (V)	230	230	230	230	230	230
	Primary taps (VAC)	218–**230** –241	218–**230** –241	218–**230** –241	218–**230** –241	218–**230** –241	218–**230** –241
	Recommended Primary fuse protection	6A BS88 & 10x38 gG IEC 60269-1&2	10A BS88 & 10x38 gG IEC 60269-1&2	16A BS88 & 10x38 gG IEC 60269-1&2	20A BS88 & 10x38 gG IEC 60269-1&2	32A BS88 & 10x38 gG IEC 60269-1&2	63A BS88 & 10x38 gG IEC 60269-1&2
	% efficiency	>96	>96	>97	>97	>97	>97
	Inrush (x times rated current)	<5	<4	<4	<7	<4	<6
	% impedance	<5	<5	<5	<5	<5	<4
	X/R ratio	0.50	0.9	1.0	0.95	1.6	0.8
Output	Secondary rated voltage (V)	110	110	110	110	110	110
	Secondary taps (VAC)	0–105 –**110** – 115	0–105 –**110** – 115	0–105 –**110** – 115	0–105 –**110** – 115	0–105 –**110** – 115	0–105 –**110** – 115
	Rating (VA)	1000	1500	2000	3000	5000	10,000
	% Regulation	<4	<4	<3	<3	<3	<3
	Insulation Resistance (Ω)	Primary to Core *>100M Ω* Secondary to Core *>100M Ω* Primary to Secondary *>100M Ω*	Primary to Core *>100M Ω* Secondary to Core *>100M Ω* Primary to Secondary *>100M Ω*	Primary to Core *>100M Ω* Secondary to Core *>100M Ω* Primary to Secondary *>100M Ω*	Primary to Core *>100M Ω* Secondary to Core *>100M Ω* Primary to Secondary *>100M Ω*	Primary to Core *>100M Ω* Secondary to Core *>100M Ω* Primary to Secondary *>100M Ω*	Primary to Core *>100M Ω* Secondary to Core *>100M Ω* Primary to Sec-ondary *>100M Ω*
Full load losses (Watts)		42.2	60.12	63.9	94.14	136.23	332.7
No load losses (Watts)		10.66	14.0	11.37	17.27	25.03	121.1
Weight (kg)		22	26	33	38	65	139

Data Specification

Aluminium Wound 230/110V
Multi Output FSP Transformers

Model		1000VA Dual Output	1400VA Quad Output (110 - 135V)	1400VA Quad Output (110 - 140V)	2000VA Quad Ouput
Electrical Specification		**T3387**	**T3391**	**T3395**	**T3399**
PAD's Number		**0091/044327**	**0091/044328**	**0091/044329**	**0091/044330**
Equipment Classification	Primary Winding Classification	Class II	Class II	Class II	Class II
	Secondary Winding Classification	Class I	Class I	Class I	Class I
	Winding conductor	Aluminium	Aluminium	Aluminium	Aluminium
Input	Primary rated voltage (V)	230	230	230	230
	Primary taps (VAC)	218–**230** –241	218–**230** –241	218–**230** –241	218–**230** –241
	Recommended Primary fuse protection	6A BS88 & 10x38 gG IEC 60269-1&2	10A BS88 & 10x38 gG IEC 60269-1&2	10A BS88 & 10x38 gG IEC 60269-1&2	16A BS88 & 10x38 gG IEC 60269-1&2
	% efficiency	>96	>96	>96	>96
	Inrush (x times rated current)	<2	<2	<2	<6
	% impedance	<4	<5	<5	<4
	X/R ratio	0.40	0.6	0.6	0.6
Output	Secondary rated voltage (V)	110 110	110 110 110 110	110 110 110 110	110 110 110 110
	Secondary taps (VAC)	0–105–**110**–115 0–105–**110**–115	0–105–**110**–115-135 0–105–**110**–115-135 0–105–**110**–115-135 0–105–**110**–115-135	0–105–**110**–115-140 0–105–**110**–115-140 0–105–**110**–115-140 0–105–**110**–115-140	0–105–**110**–115 0–105–**110**–115 0–105–**110**–115 0–105–**110**–115
	Rating (VA)	1000	1400	1400	2000
	% Regulation	<4	<4	<4	<4
	Insulation Resitance (Ω)	Primary to Core *>100M Ω* Secondary to Core *>100M Ω* Primary to Secondary *>100M Ω*	Primary to Core *>100M Ω* Secondary to Core *>100M Ω* Primary to Secondary *>100M Ω*	Primary to Core *>100M Ω* Secondary to Core *>100M Ω* Primary to Secondary *>100M Ω*	Primary to Core *>100M Ω* Secondary to Core *>100M Ω* Primary to Secondary *>100M Ω*
Full load losses (Watts)		47.1	64.99	64.99	82.13
No load losses (Watts)		13.91	15.01	15.01	13.13
Weight (kg)		24	30	30	32

Data Specification

Aluminium Wound 400-415-440/110V Single Output FSP Transformers

	Model	1000VA	1500VA	2000VA	3000VA	5000VA	10,000VA
	Electrical Specification	**T3360**	**T3364**	**T3368**	**T3372**	**T3380**	**T3384**
	PAD's Number	**0091/044331**	**0091/044332**	**0091/044333**	**0091/044334**	**0091/044335**	**0091/044336**
Equipment Classification	Primary Winding Classification	Class II	Class II	Class II	Class II	Class II	Class II
	Secondary Winding Classification	Class I	Class I	Class I	Class I	Class I	Class I
	Winding conductor	Aluminium	Aluminium	Aluminium	Aluminium	Aluminium	Aluminium
Input	Primary rated voltage (V)	400-415-440	400-415-440	400-415-440	400-415-440	400-415-440	400-415-440
	Primary taps (VAC)	380 – **400** –**415** – **440** –462	380 – **400** –**415** – **440** –462	380 – **400** –**415** – **440** –462	380 – **400** –**415** – **440** –462	380 – **400** –**415** – **440** –462	380 – **400** –**415** – **440** –462
	Recommended Primary fuse protection	4A BS88 & 10x38 gG IEC 60269-1&2	6A BS88 & 10x38 gG IEC 60269-1&2	10A BS88 & 10x38 gG IEC 60269-1&2	12A BS88 & 10x38 gG IEC 60269-1&2	20A BS88 & 10x38 gG IEC 60269-1&2	35A BS88 & 10x38 gG IEC 60269-1&2
	% efficiency	>96	>96	>97	>97	>97	>97
	Inrush (x times rated current)	<5	<4	<4	<7	<4	<6
	% impedance	<4	<5	<5	<5	<5	<4
	X/R ratio	0.5	0.9	1.0	0.9	1.6	0.8
Output	Secondary rated voltage (V)	110	110	110	110	110	110
	Secondary taps (VAC)	0–105 –**110** – 115	0–105 –**110** – 115	0–105 –**110** – 115	0–105 –**110** – 115	0–105 –**110** – 115	0–105 –**110** – 115
	Rating (VA)	1000	1500	2000	3000	5000	10,000
	% Regulation	<4	<4	<3	<3	<3	<3
	Insulation Resistance (Ω)	Primary to Core *>100M Ω* Secondary to Core *>100M Ω* Primary to Secondary *>100M Ω*	Primary to Core *>100M Ω* Secondary to Core *>100M Ω* Primary to Secondary *>100M Ω*	Primary to Core *>100M Ω* Secondary to Core *>100M Ω* Primary to Secondary *>100M Ω*	Primary to Core *>100M Ω* Secondary to Core *>100M Ω* Primary to Secondary *>100M Ω*	Primary to Core *>100M Ω* Secondary to Core *>100M Ω* Primary to Secondary *>100M Ω*	Primary to Core *>100M Ω* Secondary to Core *>100M Ω* Primary to Secondary *>100M Ω*
Full load losses (Watts)		42.2	60.12	63.9	94.14	136.23	332.7
No load losses (Watts)		10.66	14.0	11.37	17.27	25.03	121.1
Weight (kg)		22	26	33	38	65	139

Data Specification

Aluminium Wound 400-415-440/110V Multi Output FSP Transformers

Model		1000VA Dual Output	1400VA Quad Output (110 - 135V)	1400VA Quad Output (110 - 140V)	2000VA Quad Ouput
Electrical Specification		**T3388**	**T3392**	**T3396**	**T3400**
PAD's Number		**0091/044337**	**0091/044338**	**0091/044339**	**0091/044340**
Equipment Classification	Primary Winding Classification	Class II	Class II	Class II	Class II
	Secondary Winding Classification	Class I	Class I	Class I	Class I
	Winding conductor	Aluminium	Aluminium	Aluminium	Aluminium
Input	Primary rated voltage (V)	400-415-440	400-415-440	400-415-440	400-415-440
	Primary taps (VAC)	380 – **400** –**415** – **440** –462	380 – **400** –**415** – **440** –462	380 – **400** –**415** – **440** –462	380 – **400** –**415** – **440** –462
	Recommended Primary fuse protection	4A BS88 & 10x38 gG IEC 60269-1&2	6A BS88 & 10x38 gG IEC 60269-1&2	6A BS88 & 10x38 gG IEC 60269-1&2	10A BS88 & 10x38 gG IEC 60269-1&2
	% efficiency	>96	>96	>96	>96
	Inrush (x times rated current)	<2	<2	<2	<6
	% impedance	<4	<5	<5	<5
	X/R ratio	0.4	0.6	0.6	0.6
Output	Secondary rated voltage (V)	110 110	110 110 110 110	110 110 110 110	110 110 110 110
	Secondary taps (VAC)	0–105–**110**–115 0–105–**110**–115	0–105–**110**–115-135 0–105–**110**–115-135 0–105–**110**–115-135 0–105–**110**–115-135	0–105–**110**–115-140 0–105–**110**–115-140 0–105–**110**–115-140 0–105–**110**–115-140	0–105–**110**–115 0–105–**110**–115 0–105–**110**–115 0–105–**110**–115
	Rating (VA)	1000	1400	1400	2000
	% Regulation	<4	<4	<4	<4
	Insulation Resitance (Ω)	Primary to Core *>100M Ω* Secondary to Core *>100M Ω* Primary to Secondary *>100M Ω*	Primary to Core *>100M Ω* Secondary to Core *>100M Ω* Primary to Secondary *>100M Ω*	Primary to Core *>100M Ω* Secondary to Core *>100M Ω* Primary to Secondary *>100M Ω*	Primary to Core *>100M Ω* Secondary to Core *>100M Ω* Primary to Secondary *>100M Ω*
Full load losses (Watts)		47.1	64.99	64.99	82.13
No load losses (Watts)		13.91	15.01	15.01	13.13
Weight (kg)		24	30	30	32

Data Specification

Aluminium Wound 650/230V
Single Output FSP Transformers

	Model	1000VA	1500VA	2000VA	3000VA	5000VA	10,000VA
	Electrical Specification	**T3361**	**T3365**	**T3369**	**T3373**	**T3381**	**T3385**
	PAD's Number	**0091/044341**	**0091/044342**	**0091/044343**	**0091/044344**	**0091/044345**	**0091/044346**
Equipment Classification	Primary Winding Classification	Class II	Class II	Class II	Class II	Class II	Class II
	Secondary Winding Classification	Class I	Class I	Class I	Class I	Class I	Class I
	Winding conductor	Aluminium	Aluminium	Aluminium	Aluminium	Aluminium	Aluminium
Input	Primary rated voltage (V)	650	650	650	650	650	650
	Primary taps (VAC)	617–**650** –682	617 –**650** –682	617–**650** –682	617–**650** –682	617–**650**–682	617–**650** –682
	Recommended Primary fuse protection	4A BS88 & 10x38 gG IEC 60269-1&2	4A BS88 & 10x38 gG IEC 60269-1&2	6A BS88 & 10x38 gG IEC 60269-1&2	10A BS88 & 10x38 gG IEC 60269-1&2	16A BS88 & 10x38 gG IEC 60269-1&2	25 A BS88 & 10x38 gG IEC 60269-1&2
	% efficiency	>96	>96	>96	>96	>96	>96
	Inrush (x times rated current)	<5	<4	<4	<7	<4	<6
	% impedance	<4	<5	<5	<5	<5	<4
	X/R ratio	0.5	0.9	1.0	0.9	1.6	0.8
Output	Secondary rated voltage (V)	230	230	230	230	230	230
	Secondary taps (VAC)	0–218–**230** –241	0–218–**230** –241	0–218–**230** –241	0–218–**230** –241	0–218–**230** –241	0–218–**230** –241
	Rating (VA)	1000	1500	2000	3000	5000	10,000
	% Regulation	<4	<4	<3	<3	<3	<3
	Insulation Resistance (Ω)	Primary to Core *>100M Ω* Secondary to Core *>100M Ω* Primary to Secondary *>100M Ω*	Primary to Core *>100M Ω* Secondary to Core *>100M Ω* Primary to Secondary *>100M Ω*	Primary to Core *>100M Ω* Secondary to Core *>100M Ω* Primary to Secondary *>100M Ω*	Primary to Core *>100M Ω* Secondary to Core *>100M Ω* Primary to Secondary *>100M Ω*	Primary to Core *>100M Ω* Secondary to Core *>100M Ω* Primary to Secondary *>100M Ω*	Primary to Core *>100M Ω* Secondary to Core *>100M Ω* Primary to Secondary *>100M Ω*
Full load losses (Watts)		42.2	60.12	63.9	94.14	136.23	332.7
No load losses (Watts)		10.66	14.0	11.37	17.27	25.03	121.1
Weight (kg)		22	26	33	38	65	139

Data Specification

Aluminium Wound 650/230V
Multi Output FSP Transformers

Model		1000VA Dual Output	1400VA Quad Output (110 - 135V)	1400VA Quad Output (110 - 140V)	2000VA Quad Ouput
Electrical Specification		**T3389**	**T3393**	**T3397**	**T3401**
PAD's Number		**0091/044347**	**0091/044348**	**0091/044349**	**0091/044350**
Equipment Classification	Primary Winding Classification	Class II	Class II	Class II	Class II
	Secondary Winding Classification	Class I	Class I	Class I	Class I
	Winding conductor	Aluminium	Aluminium	Aluminium	Aluminium
Input	Primary rated voltage (V)	650	650	650	650
	Primary taps (VAC)	617 – **650** – 682	617 – **650** – 682	617 – **650** – 682	617 – **650** – 682
	Recommended Primary fuse protection	4A BS88 & 10x38 gG IEC 60269-1&2	4A BS88 & 10x38 gG IEC 60269-1&2	4A BS88 & 10x38 gG IEC 60269-1&2	6A BS88 & 10x38 gG IEC 60269-1&2
	% efficiency	>96	>96	>96	>96
	Inrush (x times rated current)	<2	<2	<2	<6
	% impedance	<4	<5	<5	<4
	X/R ratio	0.4	0.6	0.6	0.6
Output	Secondary rated voltage (V)	230 230	230 230 230 230	230 230 230 230	230 230 230 230
	Secondary taps (VAC)	0–218–**230** –241 0–218–**230** –241	0–135 –218–**230** –241 0–135 –218–**230** –241 0–135 –218–**230** –241 0–135 –218–**230** –241	0–140–218–**230** –241 0–140–218–**230** –241 0–140–218–**230** –241 0–140–218–**230** –241	0–218–**230** –241 0–218–**230** –241 0–218–**230** –241 0–218–**230** –241
	Rating (VA)	1000	1400	1400	2000
	% Regulation	<4	<4	<4	<4
	Insulation Resitance (Ω)	Primary to Core *>100M Ω* Secondary to Core *>100M Ω* Primary to Secondary *>100M Ω*	Primary to Core *>100M Ω* Secondary to Core *>100M Ω* Primary to Secondary *>100M Ω*	Primary to Core *>100M Ω* Secondary to Core *>100M Ω* Primary to Secondary *>100M Ω*	Primary to Core *>100M Ω* Secondary to Core *>100M Ω* Primary to Secondary *>100M Ω*
Full load losses (Watts)		47.1	64.99	64.99	82.13
No load losses (Watts)		13.91	15.01	15.01	13.13
Weight (kg)		24	30	30	32

Data Specification

Aluminium Wound 230/230V
Single Output FSP Transformers

	Model	1000VA	1500VA	2000VA	3000VA	5000VA	10,000VA
	Electrical Specification	**T3362**	**T3366**	**T3370**	**T3374**	**T3382**	**T3386**
	PAD's Number	**0091/044351**	**0091/044352**	**0091/044353**	**0091/044354**	**0091/044355**	**0091/044356**
Equipment Classification	Primary Winding Classification	Class II	Class II	Class II	Class II	Class II	Class II
	Secondary Winding Classification	Class I	Class I	Class I	Class I	Class I	Class I
	Winding conductor	Aluminium	Aluminium	Aluminium	Aluminium	Aluminium	Aluminium
Input	Primary rated voltage (V)	230	230	230	230	230	230
	Primary taps (VAC)	218–**230** –241	218–**230** –241	218–**230** –241	218–**230** –241	218–**230** –241	218–**230** –241
	Recommended Primary fuse protection	6A BS88 & 10x38 gG IEC 60269-1&2	10A BS88 & 10x38 gG IEC 60269-1&2	16A BS88 & 10x38 gG IEC 60269-1&2	20A BS88 & 10x38 gG IEC 60269-1&2	32A BS88 & 10x38 gG IEC 60269-1&2	63A BS88 & 10x38 gG IEC 60269-1&2
	% efficiency	>96	>96	>97	>97	>97	>97
	Inrush (x times rated current)	<5	<4	<4	<7	<4	<6
	% impedance	<4	<5	<5	<5	<5	<4
	X/R ratio	0.5	0.9	1.0	0.9	1.6	0.8
Output	Secondary rated voltage (V)	230	230	230	230	230	230
	Secondary taps (VAC)	0–218–**230** –241	0–218–**230** –241	0–218–**230** –241	0–218–**230** –241	0–218–**230** –241	0–218–**230** –241
	Rating (VA)	1000	1500	2000	3000	5000	10,000
	% Regulation	<4	<4	<3	<3	<3	<3
	Insulation Resistance (Ω)	Primary to Core *>100M Ω* Secondary to Core *>100M Ω* Primary to Secondary *>100M Ω*	Primary to Core *>100M Ω* Secondary to Core *>100M Ω* Primary to Secondary *>100M Ω*	Primary to Core *>100M Ω* Secondary to Core *>100M Ω* Primary to Secondary *>100M Ω*	Primary to Core *>100M Ω* Secondary to Core *>100M Ω* Primary to Secondary *>100M Ω*	Primary to Core *>100M Ω* Secondary to Core *>100M Ω* Primary to Secondary *>100M Ω*	Primary to Core *>100M Ω* Secondary to Core *>100M Ω* Primary to Secondary *>100M Ω*
Full load losses (Watts)		42.2	60.12	63.9	94.14	136.23	332.7
No load losses (Watts)		10.66	14.0	11.37	17.27	25.03	121.1
Weight (kg)		22	26	33	38	65	139

Data Specification

Aluminium Wound 230/230V
Multi Output FSP Transformers

Model		1000VA Dual Output	1400VA Quad Output (110 - 135V)	1400VA Quad Output (110 - 140V)	2000VA Quad Ouput
Electrical Specification		**T3390**	**T3394**	**T3398**	**T3402**
PAD's Number		**0091/044357**	**0091/044358**	**0091/044359**	**0091/044360**
Equipment Classification	Primary Winding Classification	Class II	Class II	Class II	Class II
	Secondary Winding Classification	Class I	Class I	Class I	Class I
	Winding conductor	Aluminium	Aluminium	Aluminium	Aluminium
Input	Primary rated voltage (V)	230	230	230	230
	Primary taps (VAC)	0–218–**230** –241	0–218–**230** –241	0–218–**230** –241	0–218–**230** –241
	Recommended Primary fuse protection	6A BS88 & 10x38 gG IEC 60269-1&2	10A BS88 & 10x38 gG IEC 60269-1&2	10A BS88 & 10x38 gG IEC 60269-1&2	16A BS88 & 10x38 gG IEC 60269-1&2
	% efficiency	>96	>96	>96	>96
	Inrush (x times rated current)	<2	<2	<2	<6
	% impedance	<4	<5	<5	<4
	X/R ratio	0.4	0.6	0.6	0.6
Output	Secondary rated voltage (V)	230 230	230 230 230 230	230 230 230 230	230 230 230 230
	Secondary taps (VAC)	0–218–230 –241 0–218–230 –241	0–135 –218–**230** –241 0–135 –218–**230** –241 0–135 –218–**230** –241 0–135 –218–**230** –241	0–140–218–**230** –241 0–140–218–**230** –241 0–140–218–**230** –241 0–140–218–**230** –241	0–218–**230** –241 0–218–**230** –241 0–218–**230** –241 0–218–**230** –241
	Rating (VA)	1000	1400	1400	2000
	% Regulation	<4	<4	<4	<4
	Insulation Resitance (Ω)	Primary to Core *>100M Ω* Secondary to Core *>100M Ω* Primary to Secondary *>100M Ω*	Primary to Core *>100M Ω* Secondary to Core *>100M Ω* Primary to Secondary *>100M Ω*	Primary to Core *>100M Ω* Secondary to Core *>100M Ω* Primary to Secondary *>100M Ω*	Primary to Core *>100M Ω* Secondary to Core *>100M Ω* Primary to Secondary *>100M Ω*
Full load losses (Watts)		47.1	64.99	64.99	82.13
No load losses (Watts)		13.91	15.01	15.01	13.13
Weight (kg)		24	30	30	32

Data Specification

Copper Wound 650/110V
Single Output FSP Transformers

Model		250VA	500VA	1000VA	1500VA	2000VA	3000VA	4000VA
Electrical Specification		T3067	T3068	T2834	T2902	T2925	T2903	T2930
PAD's Number		091/049116	091/049117	054/214900	054/214893	054/214894	054/214895	054/214896
Equipment Classification	Primary Winding Classification	Class II	Class II	Class II	Class II	Class II	Class II	Class II
	Secondary Winding Classification	Class I	Class I	Class I	Class I	Class I	Class I	Class I
	Winding Conductor	Copper	Copper	Copper	Copper	Copper	Copper	Copper
Input	Primary rated voltage (V)	650	650	650	650	650	650	650
	Primary taps (VAC)	617 – 650 – 682	617 – 650 – 682	617 – 650 – 682	617 – 650 – 682	617 – 650 – 682	617 – 650 – 682	617 – 650 – 682
	Recommended Primary fuse protection	1A BS88 & 10x38 gG IEC 60269-1&2	2A BS88 & 10x38 gG IEC 60269-1&2	4A BS88 & 10x38 gG IEC 60269-1&2	4A BS88 & 10x38 gG IEC 60269-1&2	6A BS88 & 10x38 gG IEC 60269-1&2	6A BS88 & 10x38 gG IEC 60269-1&2	10A BS88 & 10x38 gG IEC 60269-1&2
	% efficiency	>95	>95	>97	>97	>96	>97	>97
	Inrush (x times rated current)	<6	<4	<9	<5	<5	<6	<3
	% impedance	<4	<5	<4	<3	<4	<4	<3
	X/R ratio	0.2	0.3	0.7	0.5	0.7	0.9	1.2
Output	Secondary rated voltage (V)	110	110	110	110	110	110	110
	Secondary taps (VAC)	0–105–110–115	0–105–110–115	0–105–110–115	0–105–110–115	0–105–110–115	0–105–110–115	0–105–110–115
	Rating (VA)	250	500	1000	1500	2000	3000	4000
	% Regulation	<3	<4	<3	<3	<4	<3	<2
	Insulation Resistance (Ω)	Primary to Core *>100M Ω* Secondary to Core *>100M Ω* Primary to Secondary *>100M Ω*	Primary to Core *>100M Ω* Secondary to Core *>100M Ω* Primary to Secondary *>100M Ω*	Primary to Core *>100M Ω* Secondary to Core *>100M Ω* Primary to Secondary *>100M Ω*	Primary to Core *>100M Ω* Secondary to Core *>100M Ω* Primary to Secondary *>100M Ω*	Primary to Core *>100M Ω* Secondary to Core *>100M Ω* Primary to Secondary *>100M Ω*	Primary to Core *>100M Ω* Secondary to Core *>100M Ω* Primary to Secondary *>100M Ω*	Primary to Core *>100M Ω* Secondary to Core *>100M Ω* Primary to Secondary *>100M Ω*
Full load losses (Watts)		11.64	24.16	33.00	43.40	67.06	81.40	109.00
No load losses (Watts)		3.75	4.77	8.30	9.659	10.80	15.42	33.16
Weight (kg)		12	17	29	38	39	54	69

Data Specification

Copper Wound 230/110V & 400-415-440/110V Single Output FSP Transformers

	Model	250VA	500VA	250VA	500VA
	Electrical Specification	T3351	T3355	T3352	T3356
	PAD's Number	0054/213920	0054/213921	0054/213927	0054/213928
Equipment Classification	Primary Winding Classification	Class II	Class II	Class II	Class II
	Secondary Winding Classification	Class I	Class I	Class I	Class I
	Winding Conductor	Copper	Copper	Copper	Copper
Input	Primary rated voltage (V)	230	230	400–415–440	400–415–440
	Primary taps (VAC)	218–**230** –241	218–**230** –241	380 – **400** –**415** – **440** –462	380 – **400** –**415** – **440** –462
	Recommended Primary fuse protection	2A BS88 & 10x38 gG IEC 60269-1&2	4A BS88 & 10x38 gG IEC 60269-1&2	1A BS88 & 10x38 gG IEC 60269-1&2	2A BS88 & 10x38 gG IEC 60269-1&2
	% efficiency	>95	>95	>95	>95
	Inrush (x times rated current)	<6	<4	<6	<4
	% impedance	<4	<5	<4	<5
	X/R ratio	0.2	0.3	0.2	0.3
Output	Secondary rated voltage (V)	110	110	110	110
	Secondary taps (VAC)	0–105–**110**–115	0–105–**110**–115	0–105–**110**–115	0–105–**110**–115
	Rating (VA)	250	500	250	500
	% Regulation	<3	<4	<3	<4
	Insulation Resitance (Ω)	Primary to Core *>100M Ω* Secondary to Core *>100M Ω* Primary to Secondary *>100M Ω*	Primary to Core *>100M Ω* Secondary to Core *>100M Ω* Primary to Secondary *>100M Ω*	Primary to Core *>100M Ω* Secondary to Core *>100M Ω* Primary to Secondary *>100M Ω*	Primary to Core *>100M Ω* Secondary to Core *>100M Ω* Primary to Secondary *>100M Ω*
	Full load losses (Watts)	11.64	24.16	11.64	24.16
	No load losses (Watts)	3.75	4.77	3.75	4.77
	Weight (kg)	12	17	12	17

Data Specification

Copper Wound 650/230 & 230/230 Single Output FSP Transformers

Model		**250VA**	**500VA**	**250VA**	**500VA**
Electrical Specification		T3353	T3357	T3354	T3358
PAD's Number		0054/213934	0054/213935	0054/213941	0054/213942
Equipment Classification	Primary Winding Classification	Class II	Class II	Class II	Class II
	Secondary Winding Classification	Class I	Class I	Class I	Class I
	Winding Conductor	Copper	Copper	Copper	Copper
Input	Primary rated voltage (V)	650	650	230	230
	Primary taps (VAC)	617 – **650** – 682	617 – **650** – 682	218–**230** –241	218–**230** –241
	Recommended Primary fuse protection	1A BS88 & 10x38 gG IEC 60269-1&2	2A BS88 & 10x38 gG IEC 60269-1&2	2A BS88 & 10x38 gG IEC 60269-1&2	4A BS88 & 10x38 gG IEC 60269-1&2
	% efficiency	>95	>95	>95	>95
	Inrush (x times rated current)	<6	<4	<6	<4
	% impedance	<4	<5	<4	<5
	X/R ratio	0.2	0.3	0.2	0.3
Output	Secondary rated voltage (V)	230	230	230	230
	Secondary taps (VAC)	0–218–**230** –241	0–218–**230** –241	0–218–**230** –241	0–218–**230** –241
	Rating (VA)	250	500	250	500
	% Regulation	<3	<4	<3	<4
	Insulation Resistance (Ω)	Primary to Core *>100M Ω* Secondary to Core *>100M Ω* Primary to Secondary *>100M Ω*	Primary to Core *>100M Ω* Secondary to Core *>100M Ω* Primary to Secondary *>100M Ω*	Primary to Core *>100M Ω* Secondary to Core *>100M Ω* Primary to Secondary *>100M Ω*	Primary to Core *>100M Ω* Secondary to Core *>100M Ω* Primary to Secondary *>100M Ω*
Full load losses (Watts)		11.64	24.16	11.64	24.16
No load losses (Watts)		3.75	4.77	3.75	4.77
Weight (kg)		12	17	12	17

Data Specification

Copper Wound 650/120VDC

FSP Transformer Rectifiers for Point Drive Systems

	Model	650VAC/120V @ 2.5A	650VAC/120V @ 5A	650VAC/ 2 X 120V@5A	650VAC/120VDC @10A
Electrical Specification		T3040	T3024	T3055	T3007
PAD's Number		054/035055	054/035056	054/035058	054/035057
Equipment Classification	Primary Winding Classification	Class II	Class II	Class II	Class II
	Secondary Winding Classification	Class I	Class I	Class I	Class I
	Winding Conductor	Copper	Copper	Copper	Copper
Input	Primary rated voltage (V)	650	650	650	650
	Primary taps (VAC)	617 – 650 – 682	617 – 650 – 682	617 – 650 – 682	617 – 650 – 682
	Recommended Primary fuse protection	4A BS88 & 10x38 gG IEC 60269-1&2	6A BS88 & 10x38 gG IEC 60269-1&2	6A BS88 & 10x38 gG IEC 60269-1&2	10A BS88 & 10x38 gG IEC 60269-1&2
	% efficiency	>95	>96	>97	>97
	Inrush (x times rated current)	<4	<9	<8	<10
	% impedance	<4	<4	<4	<3
	X/R ratio	0.4	0.4	1.0	0.6
Output	Secondary rated voltage (VDC)	120	120	120	120
	Secondary taps (VAC)	0-131–136–140	0-131–136–140	0–131–136–140 0–131–136–140	0- 131–136–140
	Rating (A)	2.5	5	10	10
	% Regulation	<4	<3	<3	<3
	Insulation Resitance (Ω)	*Insulation Resistance (500V) Primary to Core >100M Ohms Secondary to Core >100M Ohms Primary to Secondary >100M Ohms*	*Insulation Resistance (500V) Primary to Core >100M Ohms Secondary to Core >100M Ohms Primary to Secondary >100M Ohms*	*Insulation Resistance (500V d.c) Primary to Core >100M Ohms Secondary to Core >100M Ohms Primary to Secondary >100M Ohms*	*Insulation Resistance (500V) Primary to Core >100M Ohms Secondary to Core >100M Ohms Primary to Secondary >100M Ohms*
Full load losses (Watts)		15.400	27.340	43.300	40.935
No load losses (Watts)		5.130	6.750	12.200	12.145
Weight (kg)		20	25	39	40

Data Specification

Copper Wound 230/120VDC

FSP Transformer Rectifiers for Point Drive Systems

Model		230VAC/120V @ 2.5A	230VAC/120V @ 5A	230VAC/120VDC @10A	230VAC/ 2 X 120V @5A
Electrical Specification		T3403	T3405	T3407	T3409
PAD's Number		0054/035060	0054/035061	0054/035062	0054/035063
Equipment Classification	Primary Winding Classification	Class II	Class II	Class II	Class II
	Secondary Winding Classification	Class I	Class I	Class I	Class I
	Winding Conductor	Copper	Copper	Copper	Copper
Input	Primary rated voltage (V)	230	230	230	230
	Primary taps (VAC)	218–**230** –241	218–**230** –241	218–**230** –241	218–**230** –241
	Recommended Primary fuse protection	4A BS88 & 10x38 gG IEC 60269-1&2	10A BS88 & 10x38 gG IEC 60269-1&2	16A BS88 & 10x38 gG IEC 60269-1&2	10A BS88 & 10x38 gG IEC 60269-1&2
	% efficiency	>96	>96	>97	>97
	Inrush (x times rated current)	<4	<9	<10	<8
	% impedance	<4	<4	<3	<3
	X/R ratio	0.4	0.4	0.6	0.6
Output	Secondary rated voltage (VDC)	120	120	120	120
	Secondary taps (VAC)	0-131–136–140	0-131–136–140	0-131–136–140	0-131–136–140 0-131–136–140
	Rating (A)	2.5	5	10	10
	% Regulation	<4	<3	<3	<3
	Insulation Resistance (Ω)	*Insulation Resistance (500V) Primary to Core >100M Ohms Secondary to Core >100M Ohms Primary to Secondary >100M Ohms*	*Insulation Resistance (500V) Primary to Core >100M Ohms Secondary to Core >100M Ohms Primary to Secondary >100M Ohms*	*Insulation Resistance (500V) Primary to Core >100M Ohms Secondary to Core >100M Ohms Primary to Secondary >100M Ohms*	*Insulation Resistance (500V) Primary to Core >100M Ohms Secondary to Core >100M Ohms Primary to Secondary >100M Ohms*
Full load losses (Watts)		15.400	27.340	43.300	40.935
No load losses (Watts)		5.130	6.750	12.200	12.145
Weight (kg)		20	25	40	39

Data Specification

Copper Wound 400-415-440/120VDC FSP Transformer Rectifiers for Point Drive Systems

Model		400VAC/ 2 X 120V@5A	400-415-440VAC / 120V @ 2.5A	400-415-440VAC / 120V @ 5A	400-415-440VAC / 120V @10A	400-415-440VAC/ 120V 2 X 120V @ 5A
Electrical Specification		T3092	T3404	T3406	T3408	T3410
PAD's Number		054/035059	0054/035064	0054/035065	0054/035066	0054/035067
Equipment Classification	Primary Winding Classification	Class II	Class II	Class II	Class II	Class II
	Secondary Winding Classification	Class I	Class I	Class I	Class I	Class I
	Winding Conductor	Copper	Copper	Copper	Copper	Copper
Input	Primary rated voltage (V)	650	400–415–440	400–415–440	400–415–440	400–415–440
	Primary taps (VAC)	380 – 400 – 420	380 – 400 – 415 – 440 – 462	380 – 400 – 415 – 440 – 462	380 – 400 – 415 – 440 – 462	380 – 400 – 415 – 440 – 462
	Recommended Primary fuse protection	6A BS88 & 10x38 gG IEC 60269-1&2	4A BS88 & 10x38 gG IEC 60269-1&2	6A BS88 & 10x38 gG IEC 60269-1&2	10A BS88 & 10x38 gG IEC 60269-1&2	6A BS88 & 10x38 gG IEC 60269-1&2
	% efficiency	>97	>96	>96	>97	>97
	Inrush (x times rated current)	<7	<4	<9	<10	<8
	% impedance	<4	<4	<4	<3	<3
	X/R ratio	1.2	0.4	0.4	0.6	0.6
Output	Secondary rated voltage (VDC)	120	120	120	120	120
	Secondary taps (VAC)	0–131–136–140 0–131–136–140	0-131–136–140	0-131–136–140	0-131–136–140	0-131–136–140 0-131–136–140
	Rating (A)	10	2.5	5	10	10
	% Regulation	<3	<4	<3	<3	<3
	Insulation Resitance (Ω)	*Insulation Resistance (500V) Primary to Core >100M Ohms Secondary to Core >100M Ohms Primary to Secondary >100M Ohms*	*Insulation Resistance (500V) Primary to Core >100M Ohms Secondary to Core >100M Ohms Primary to Secondary >100M Ohms*	*Insulation Resistance (500V) Primary to Core >100M Ohms Secondary to Core >100M Ohms Primary to Secondary >100M Ohms*	*Insulation Resistance (500V) Primary to Core >100M Ohms Secondary to Core >100M Ohms Primary to Secondary >100M Ohms*	*Insulation Resistance (500V) Primary to Core >100M Ohms Secondary to Core >100M Ohms Primary to Secondary >100M Ohms*
Full load losses (Watts)		40.100	15.400	27.340	43.300	40.935
No load losses (Watts)		12.200	5.130	6.750	12.200	12.145
Weight (kg)		39	20	25	40	39

Wiring Diagrams
250VA-10KVA
Aluminium & Copper Single Output

650-110V Signalling Transformers

Aluminium:
T2966 T3065 T2967 T2968 T2969 T3149

Copper:
T3067 T3068 T2834 T2902 T2925 T2903 T2930

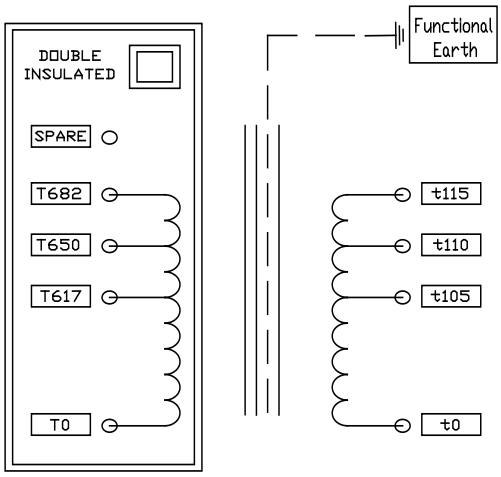

230-110V Signalling Transformers

Aluminium:
T3351 T3355 T3359 T3363 T3367 T3371 T3375 T3379 T3383

Copper:
T3351 T3355

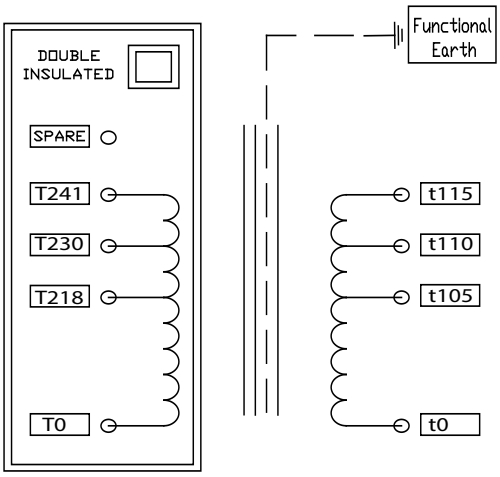

400-415-440/110V Signalling Transformers

Aluminium:
T3360 T3364 T3368 T3372 T3380 T3384
Copper:
T3352 T3356

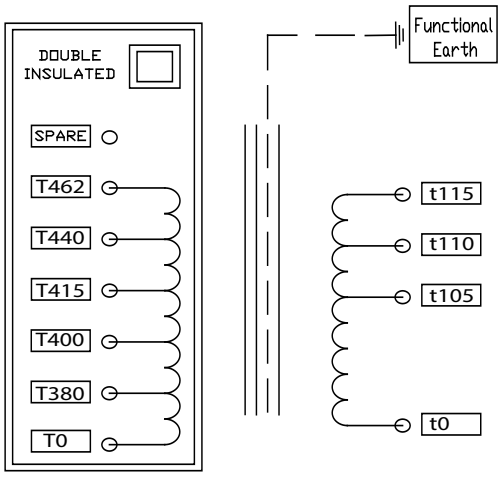

650-230V Signalling Transformers

Aluminium:
T3361 T3365 T3369 T3373 T3381 T3385
Copper:
T3353 T3357

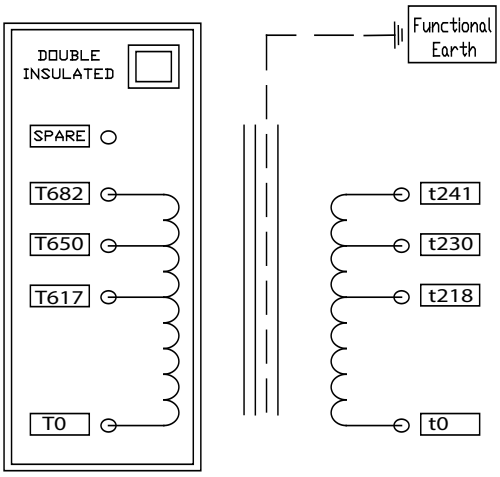

Wiring Diagrams
250VA-10KVA
Aluminium & Copper Single/Multi Output

230-230V Signalling Transformers

Aluminium:
T3362 T3366 T3370 T3374 T3382 T3386

Copper:
T3354 T3358

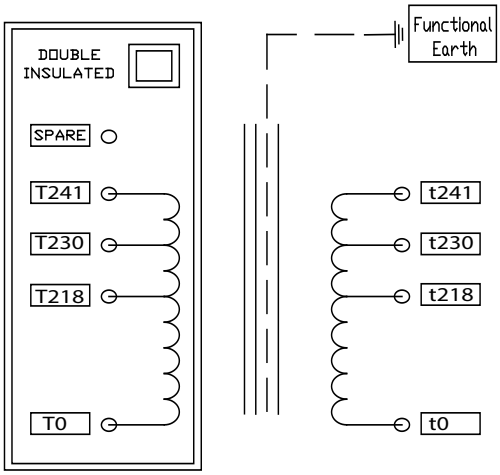

650-110V Signalling Transformers Dual Output WTS

Aluminium:
T3073

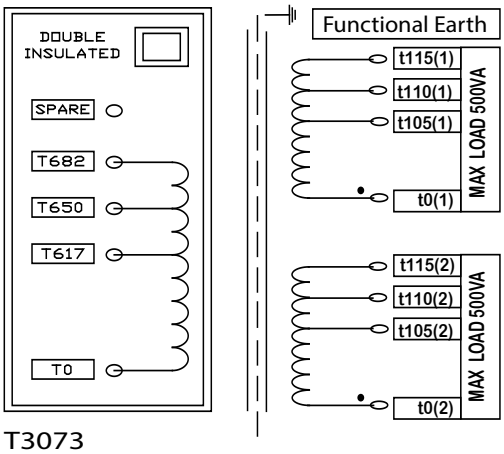

T3073

230-110V Signalling Transformers Dual Output WTS

Aluminium:
T3387

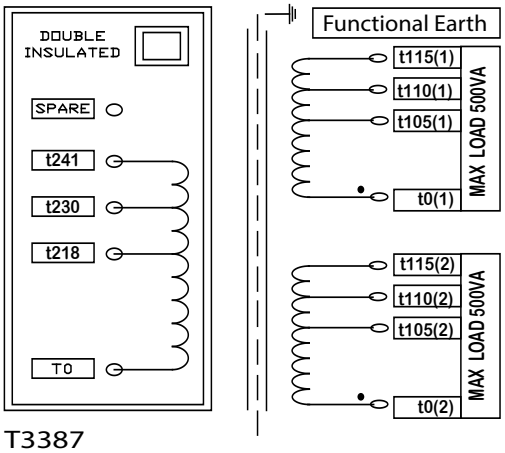

T3387

400-415-440/110V Signalling Transformers Dual Output WTS

Aluminium:
T3388

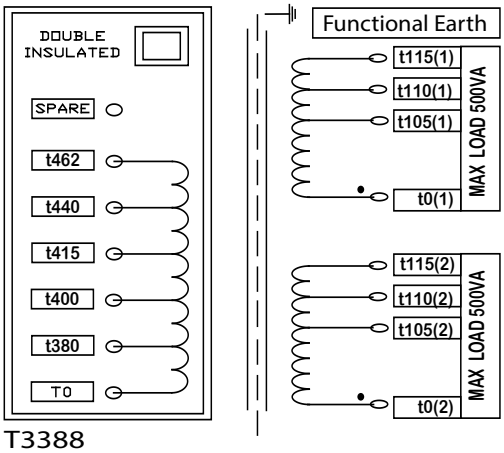

T3388

Wiring Diagrams
250VA-10KVA
Aluminium & Copper Multi Output

650-230V Signalling Transformers Dual Output WTS

Aluminium:
T3389

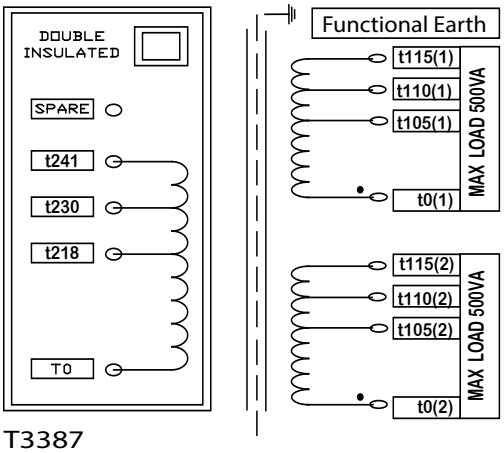

T3387

230-230V Signalling Transformers Dual Output WTS

Aluminium:
T3390

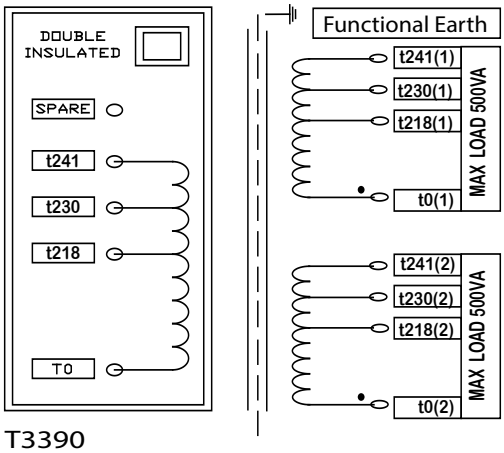

T3390

650/110V Signalling Transformers Quad Output SSI (110 - 135V)

Aluminium:
T3074

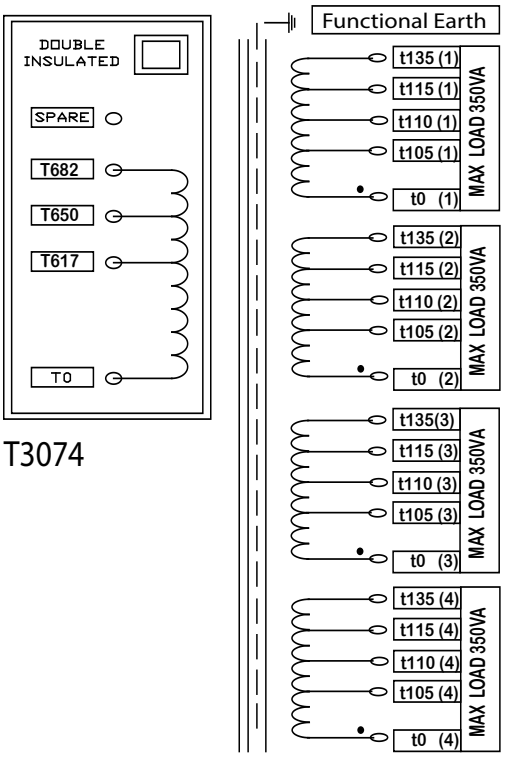

T3074

650/110V Signalling Transformers Quad Output SSI (110 - 140V)

Aluminium:
T3074-2

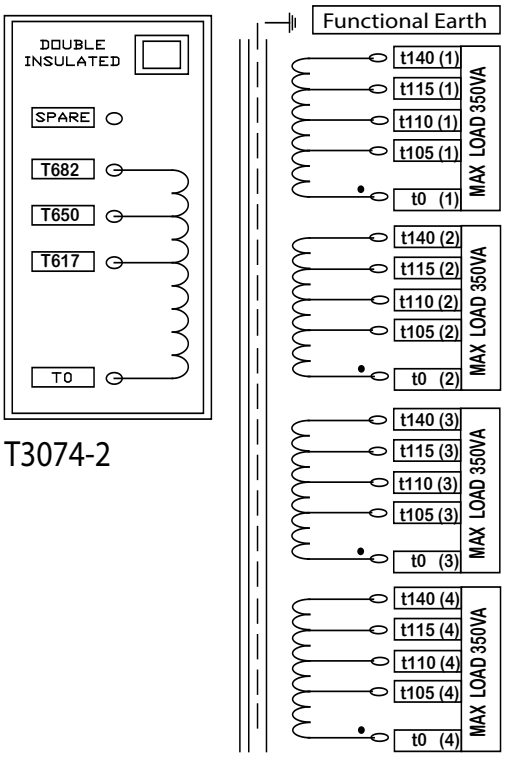

T3074-2

650/110V Signalling Transformers Quad Output WTS (110 - 115V)

Aluminium:
T3075

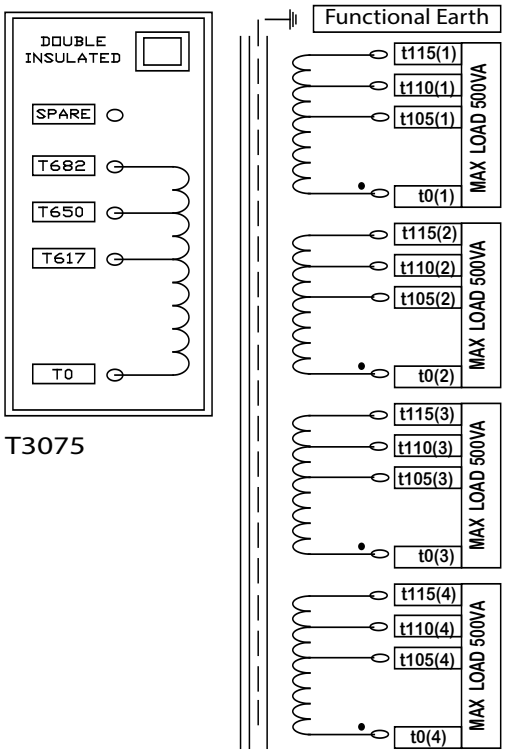

230-110V Signalling Transformers Quad Output SSI (110 - 135V)

Aluminium:
T3391

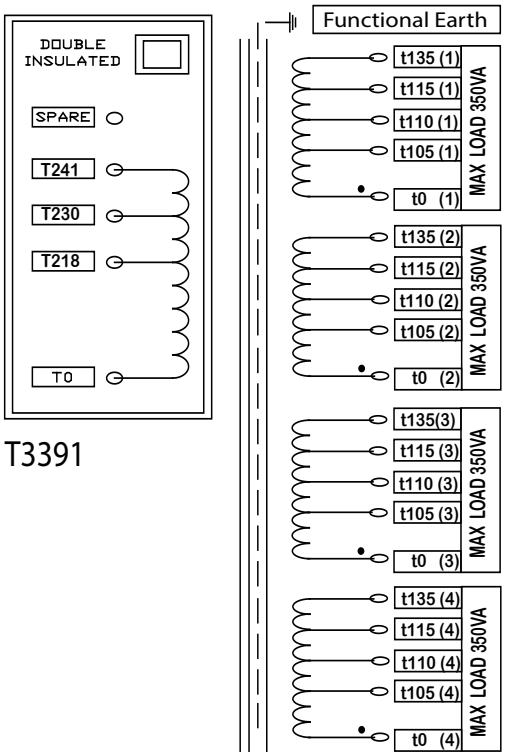

230-110V Signalling Transformers Quad Output SSI (110 - 140V)

Aluminium:
T3395

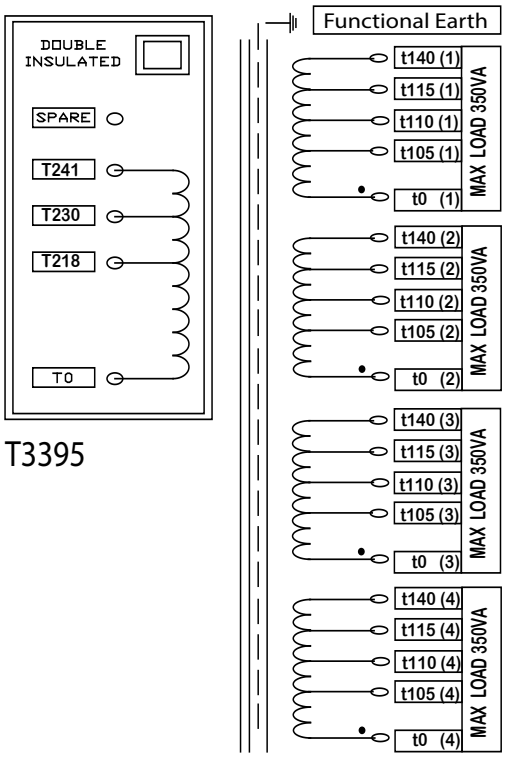

230-110V Signalling Transformers Quad Output WTS (110 - 115V)

Aluminium:
T3399

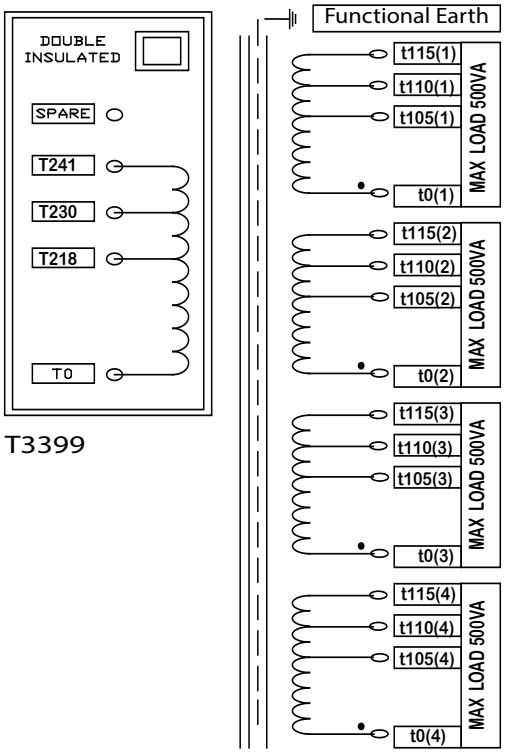

400-415-440/110V
Signalling Transformers
Quad Output SSI (110 - 135V)

Aluminium:
T3392

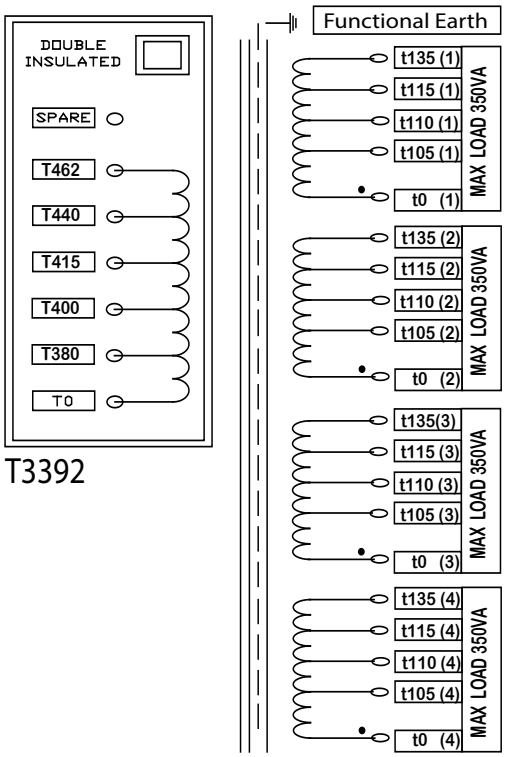

400-415-440/110V
Signalling Transformers
Quad Output SSI (110 - 140V)

Aluminium:
T3396

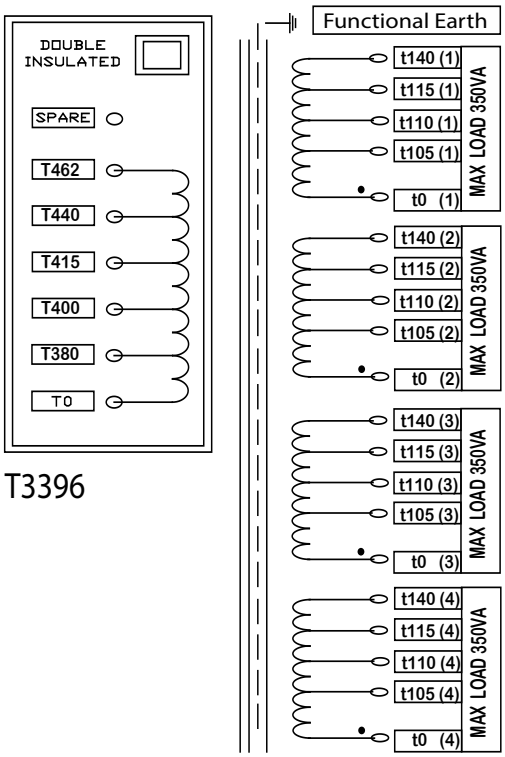

400-415-440/110V
Signalling Transformers
Quad Output WTS (110 - 115V)

Aluminium:
T3400

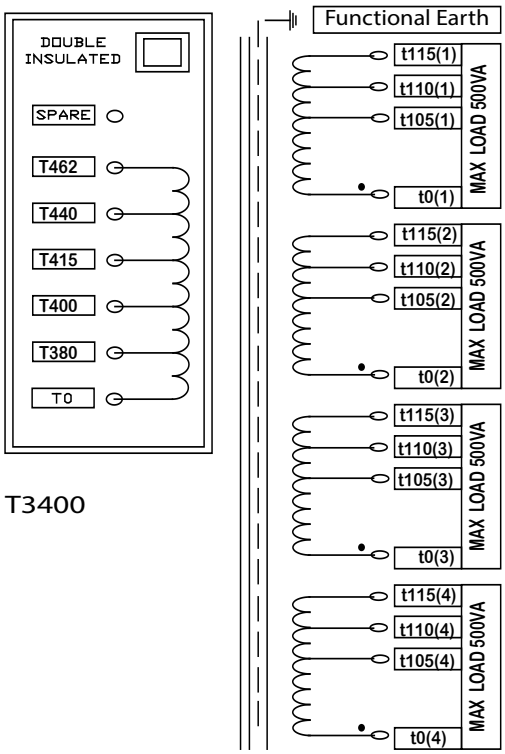

650-230V Signalling Transformers
Quad Output SSI (135 - 230V)

Aluminium:
T3393

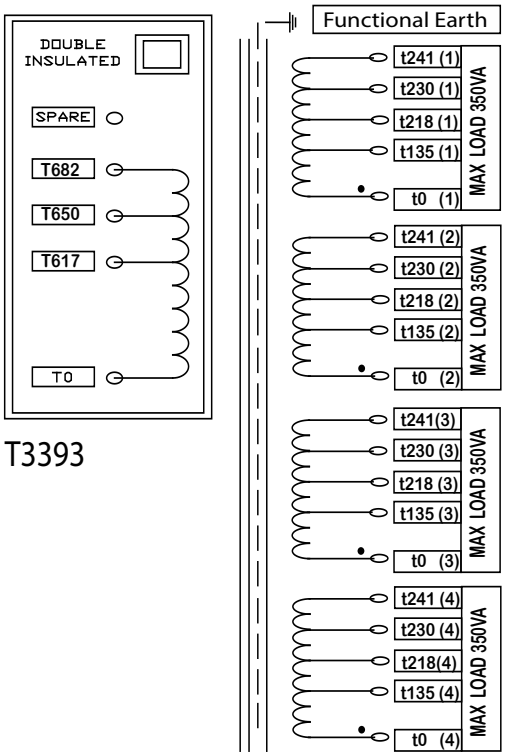

650-230V Signalling Transformers Quad Output SSI (140- 230V)

Aluminium:
T3397

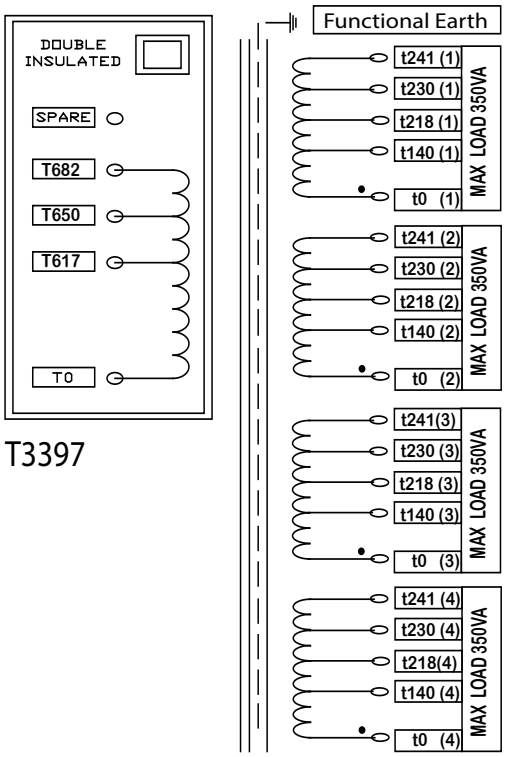

650-230V Signalling Transformers Quad Output WTS (230 - 241V)

Aluminium:
T3401

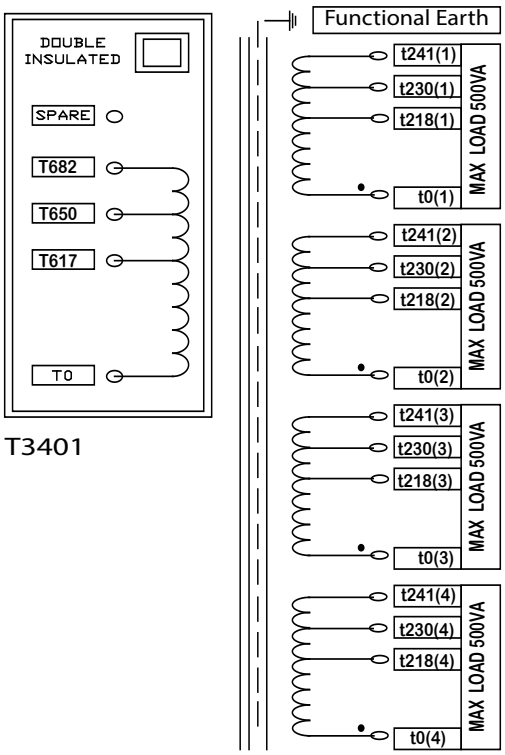

230-230V Signalling Transformers Quad Output SSI (135 - 230V)

Aluminium:
T3394

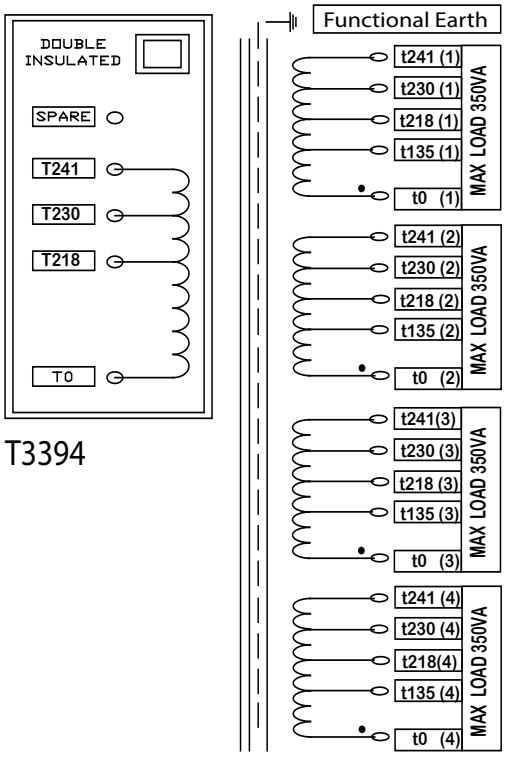

230-230V Signalling Transformers Quad Output SSI (140 - 230V)

Aluminium:
T3398

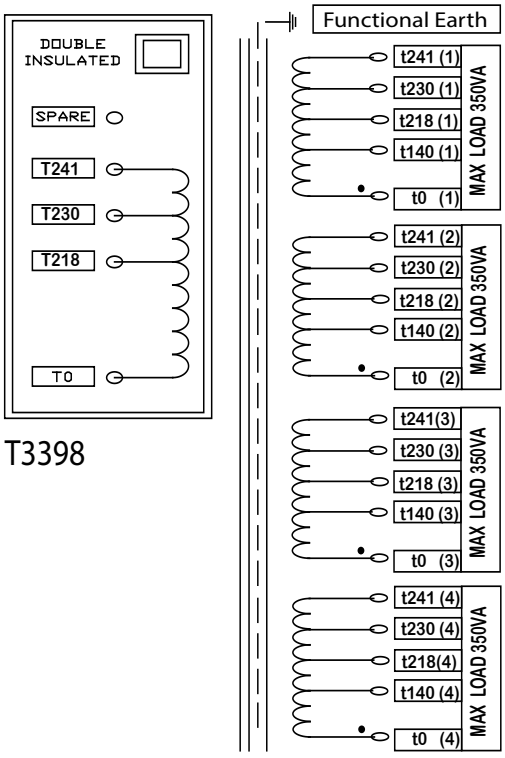

Wiring Diagrams
250VA-10KVA / 2.5A-10A
Aluminium & Copper Multi Output/Point Drive Rectifiers

230-230V Signalling Transformers
Quad Output WTS (230 - 241V)

Aluminium:
T3402

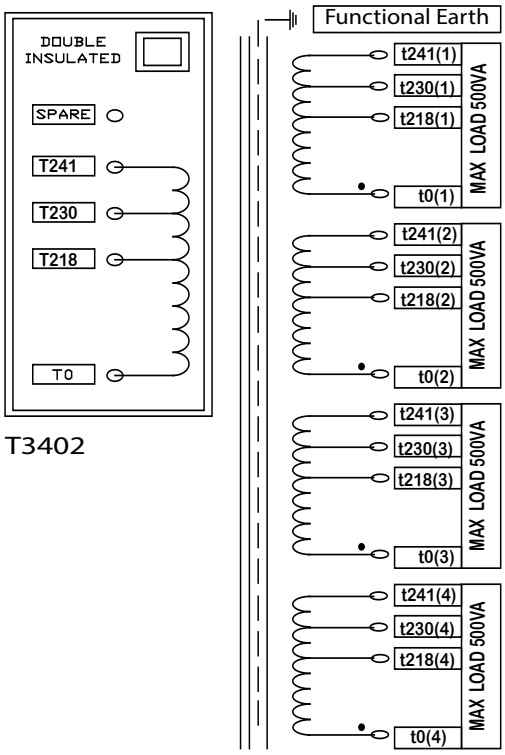

650/120VDC Point Drive Rectifier
650VAC/120V @ 2.5A

Copper:
T3040

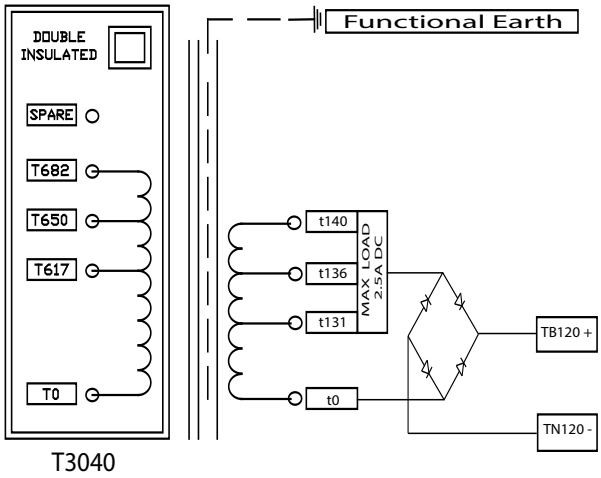

650/120VDC Point Drive Rectifier
650VAC/120V @ 5A

Copper:
T3024

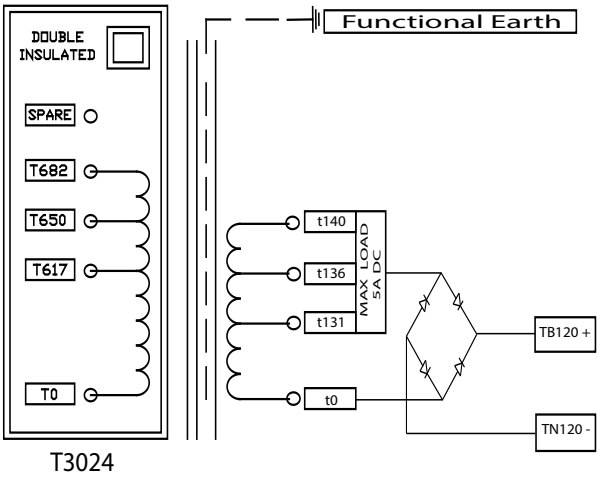

650/120VDC Point Drive Rectifier
650VAC/ 2 X 120V@5A

Copper:
T3055

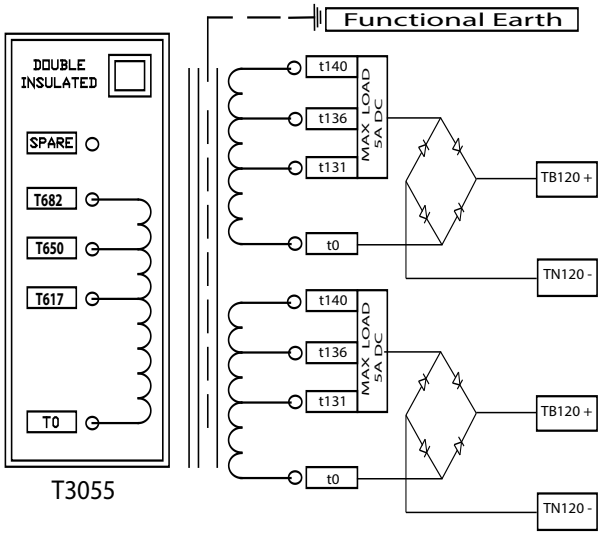

Wiring Diagrams
2.5A-10A
Copper Point Drive Rectifiers

400/120VDC Point Drive Rectifier
400VAC/ 2 X 120V@5A

Copper:
T3092

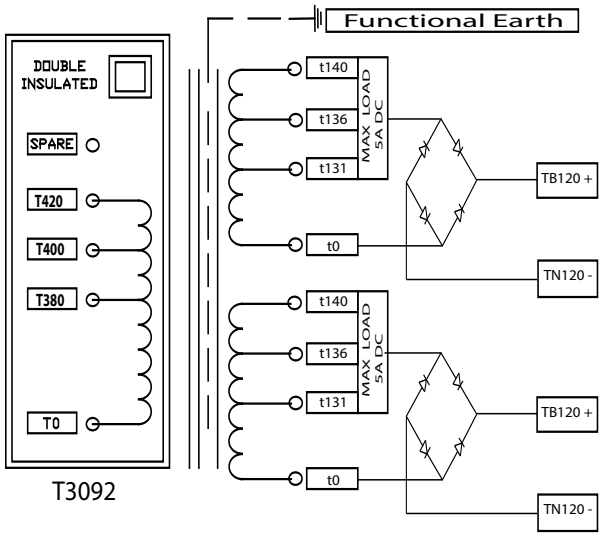

650/120VDC Point Drive Rectifier
650VAC/120VDC @10A

Copper:
T3007

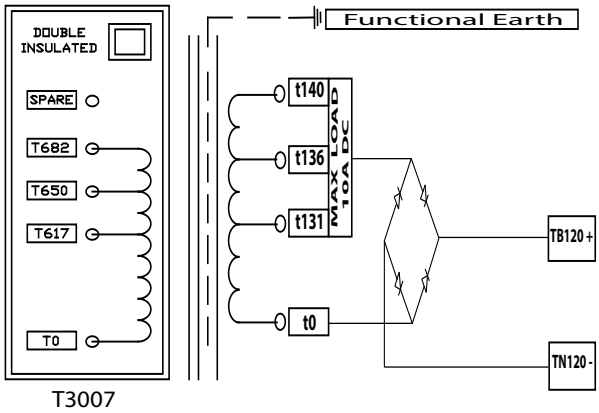

230/120VDC Point Drive Rectifier
650VAC/120V @ 2.5A

Copper:
T3403

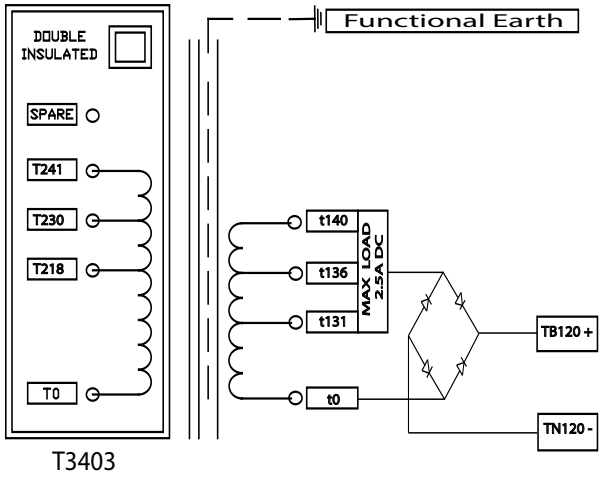

230/120VDC Point Drive Rectifier
650VAC/120V @ 5A

Copper:
T3405

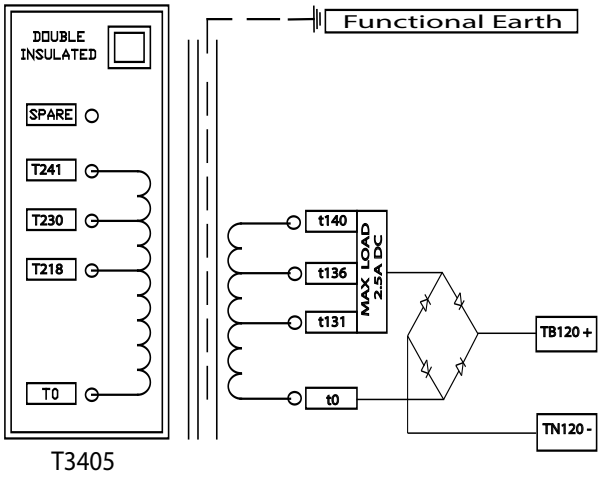

Wiring Diagrams
2.5A-10A
Copper Point Drive Rectifiers

230/120VDC Point Drive Rectifier
650VAC/120V @ 10A

Copper:
T3407

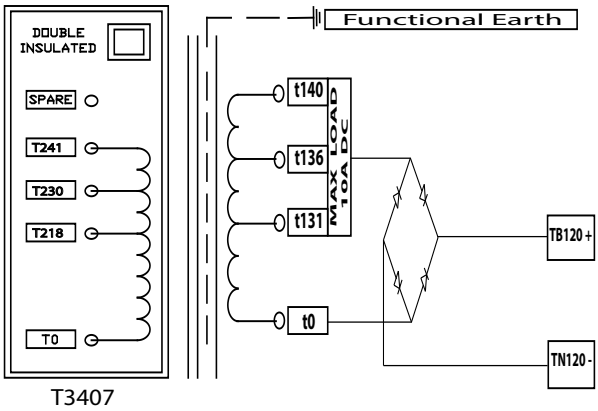

T3407

230/120VDC Point Drive Rectifier
650VAC/120V @ 5A x 2

Copper:
T3409

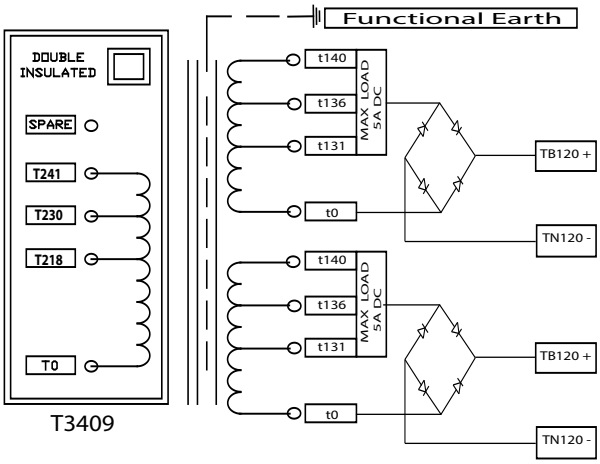

T3409

400-415-440/120VDC
Point Drive Rectifier
400-415-440VAC/120V @ 2.5A

Copper:
T3404

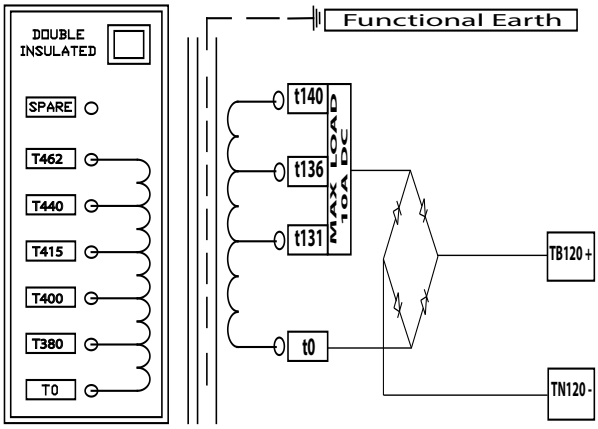

T3404

400-415-440/120VDC
Point Drive Rectifier
400-415-440VAC/120V @ 5A

Copper:
T3406

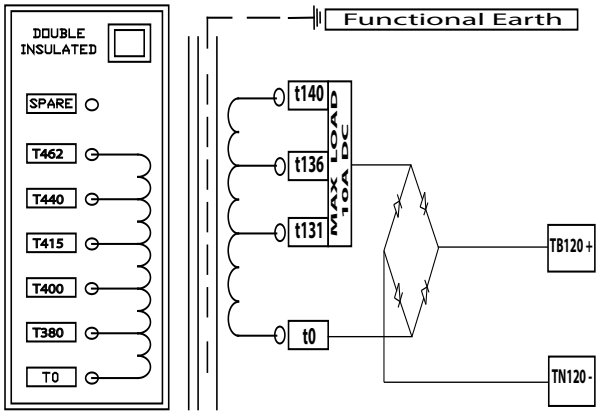

T3406

Wiring Diagrams
2.5A-10A
Copper Point Drive Rectifiers

400-415-440/120VDC Point Drive Rectifier 400-415-440VAC/120V @ 10A	**400-415-440/120VDC** Point Drive Rectifier 400-415-440VAC/120V @ 5A x 2
Copper: T3408	**Copper:** T3410
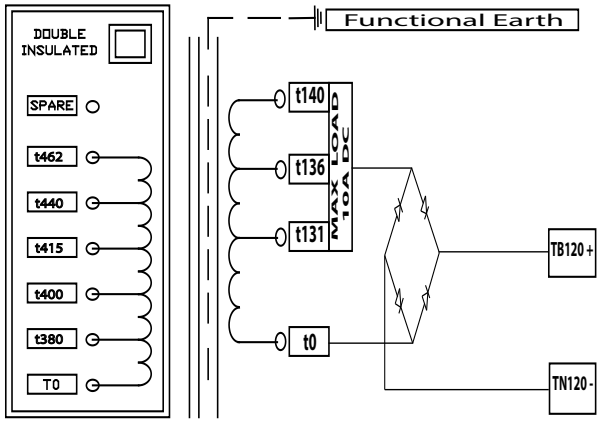 T3408	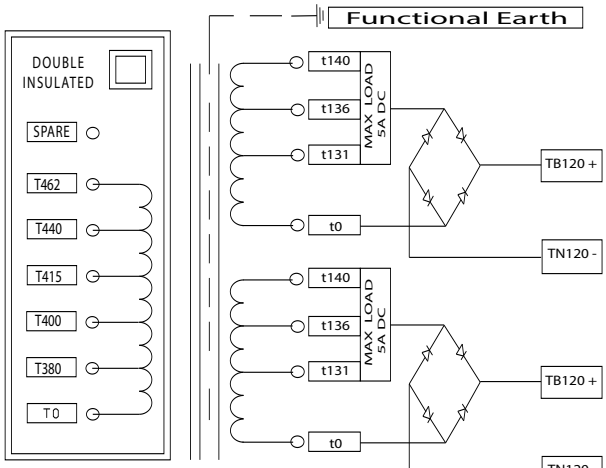 T3410

Additional Items
Legacy Brackets

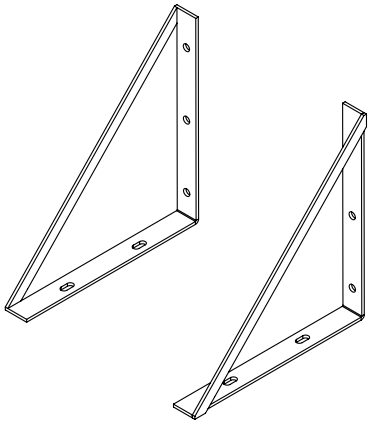

Included on:

Aluminium FSP Signalling Transformers
Network Rail Accepted Product:
PA05/07022

Copper FSP Signalling Transformers
Network Rail Accepted Product:
PA05/0576

Part No.	Description	Catalogue No.
D1496-1	LEGACY BRACKETS FOR 250-500VA TRANSFORMERS & 2.5A TJ's	054/214897
D1496-2	LEGACY BRACKETS FOR 1KVA - 1.5KVA TRANSFORMERS INC 1KVA DUAL OUTPUT & 5A TJ's.	054/214898
D1496-3	LEGACY BRACKETS FOR 2KVA - 4KVA TRANSFORMERS INC QUAD OUTPUTS, 10A TJ's AND DUAL 5A TJ's.	054/214899

Data Specification

Multi Output Configurations For Quad Output Transformers

Example used T3704

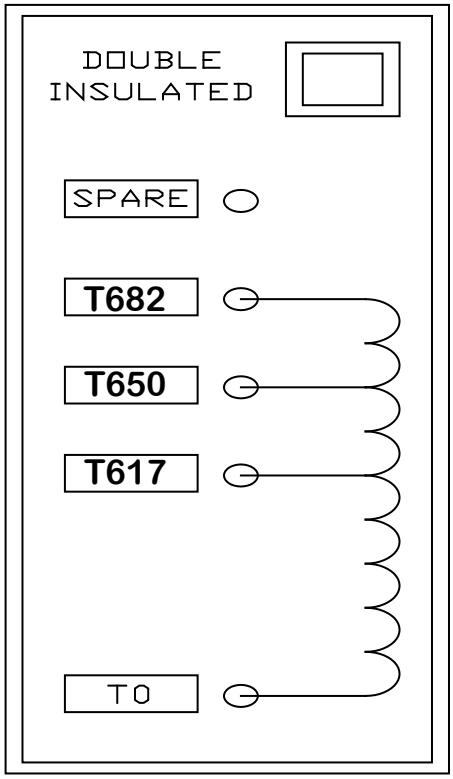

Dual Parallel

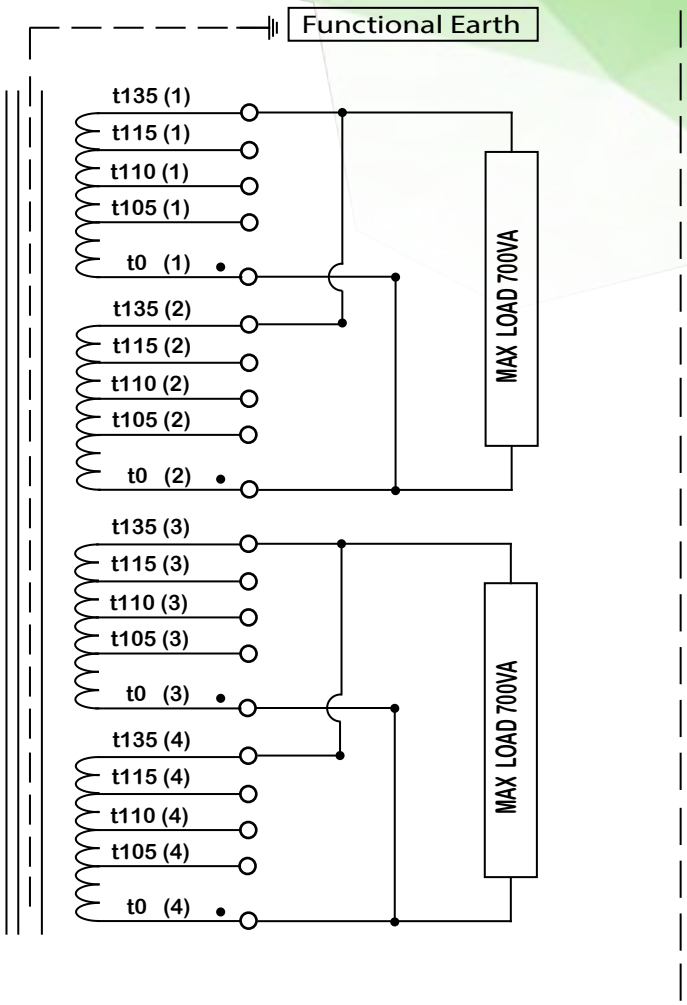

3 Parallel + Single

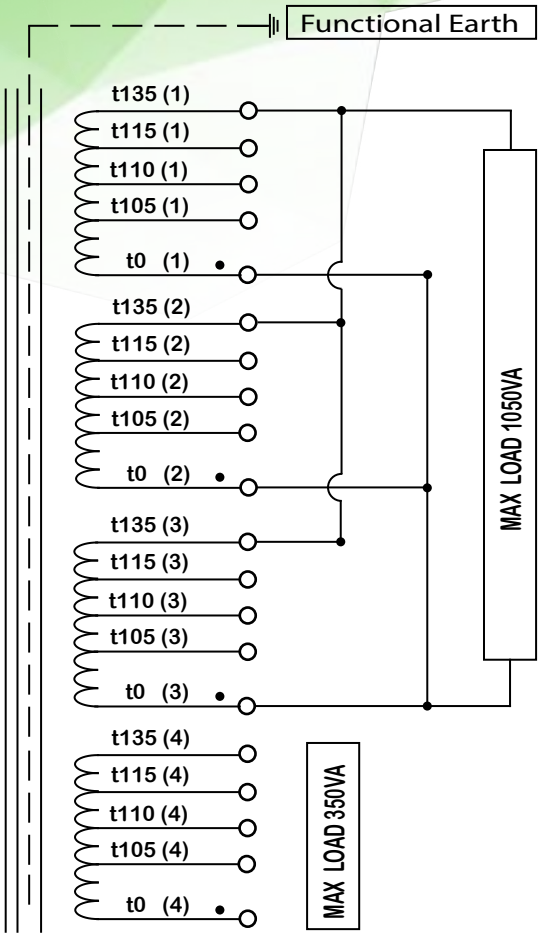

4 Parallel

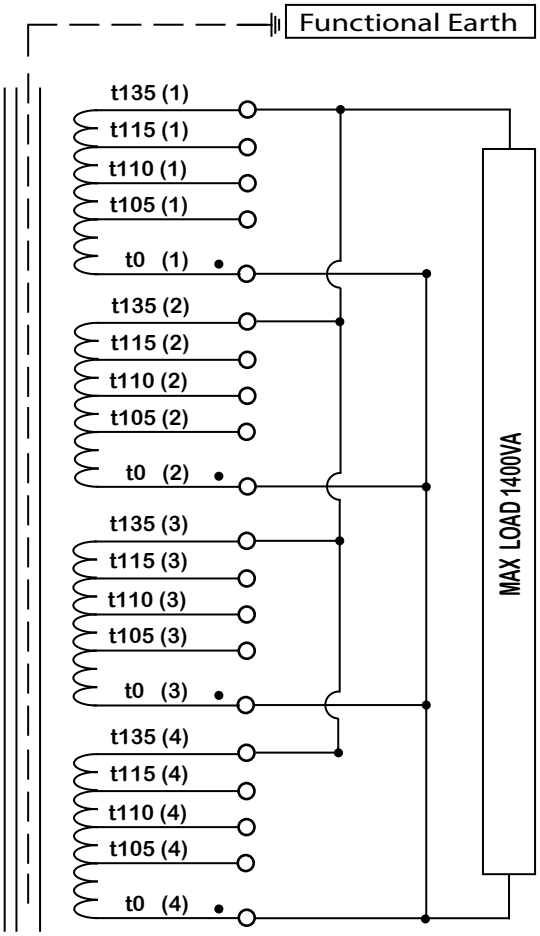

General Arrangements
250VA-10KVA
Aluminium & Copper Wound FSP Transformer Specifications

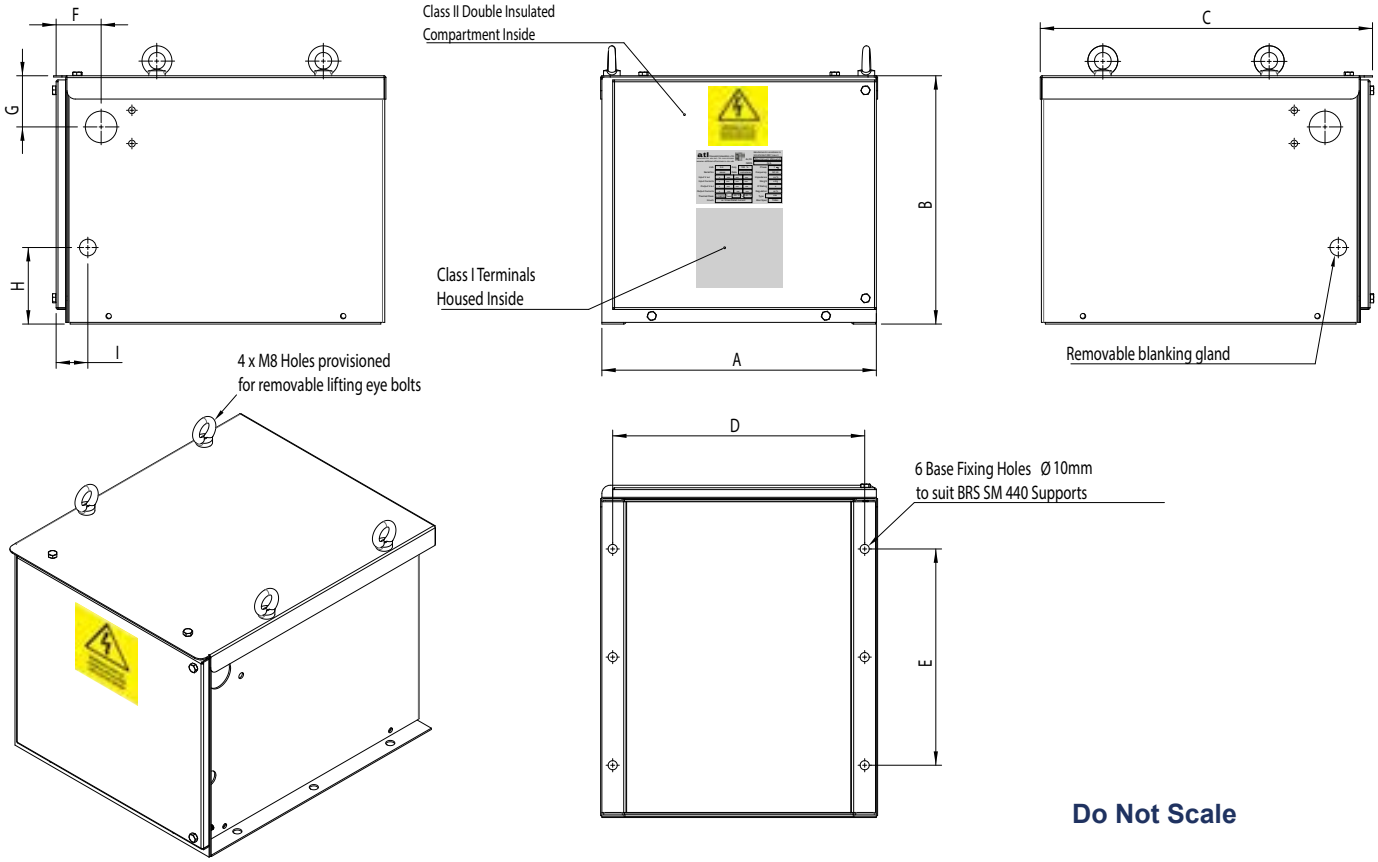

Do Not Scale

Aluminium Wound FSP Transformers									
Model (VA)	Dimension (mm)								
	A	B	C	D	E	F	G	H	I
1000VA	289	299	245	260	115	43	62	73	27
1500VA	289	299	277	260	115	54	62	93	27
2000VA	289	299	320	260	115	43	62	93	27
3000VA	289	299	320	260	115	43	62	93	27
5000VA	333	325	402	307	260	54	62	91	48
10,000VA	See Page 36								
1000VA Dual Output	289	299	277	260	115	54	62	93	27
1400VA Dual Output	289	299	320	260	115	43	62	93	27
2000VA Quad Ouput	289	299	320	260	115	43	62	93	27

Copper Wound FSP Transformers									
Model (VA)	Dimension (mm)								
	A	B	C	D	E	F	G	H	I
250VA	222	268	205	203	115	54	62	92	22
500VA	222	268	205	203	115	54	62	92	22
1000VA	289	299	245	260	115	43	62	73	27
1500VA	289	299	277	260	115	54	62	93	27
2-4000VA	289	299	320	260	115	43	62	93	27

General Arrangements
2.5A-10A
Single & Multi Output
Transformer Rectifiers for Point Drive Systems

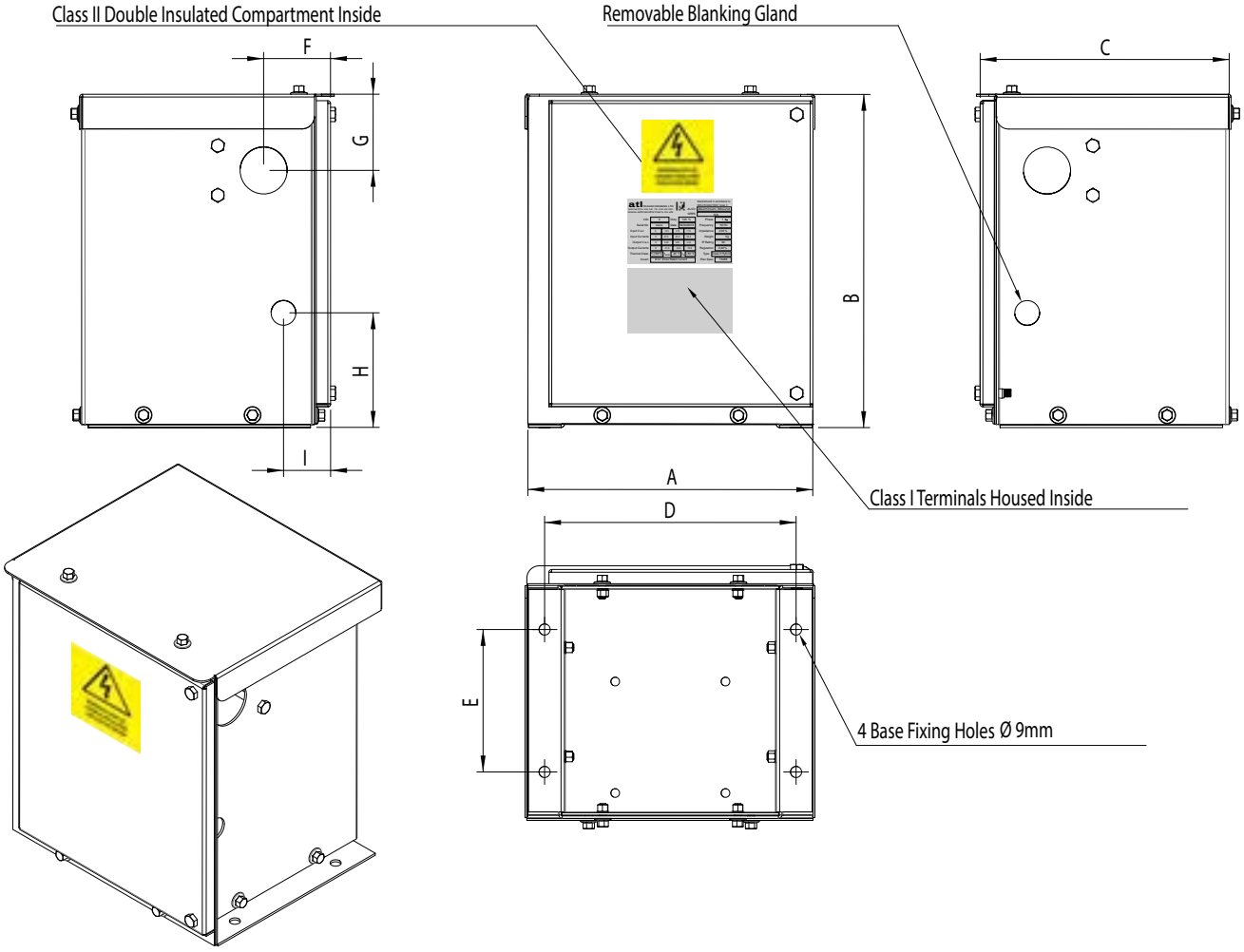

Do Not Scale

Copper TJ Rectifiers									
Model (VA)	Dimension (mm)								
	A	B	C	D	E	F	G	H	I
2.5A	230	269	210	203	115	54	62	93	27
5A	286	299	249	259	115	54	62	93	38
2x5A	286	299	329	259	115	54	62	93	38
2x5A	286	299	329	259	115	54	62	93	38
10A	286	299	329	259	115	54	62	73	38

General Arrangements

10KVA

Aluminium
FSP Transformer Specifications

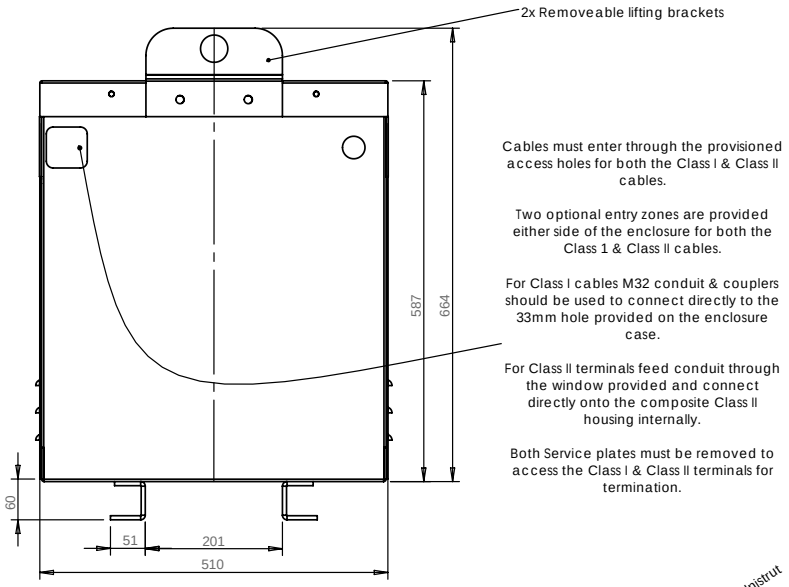

Cables must enter through the provisioned access holes for both the Class I & Class II cables.

Two optional entry zones are provided either side of the enclosure for both the Class 1 & Class II cables.

For Class I cables M32 conduit & couplers should be used to connect directly to the 33mm hole provided on the enclosure case.

For Class II terminals feed conduit through the window provided and connect directly onto the composite Class II housing internally.

Both Service plates must be removed to access the Class I & Class II terminals for termination.

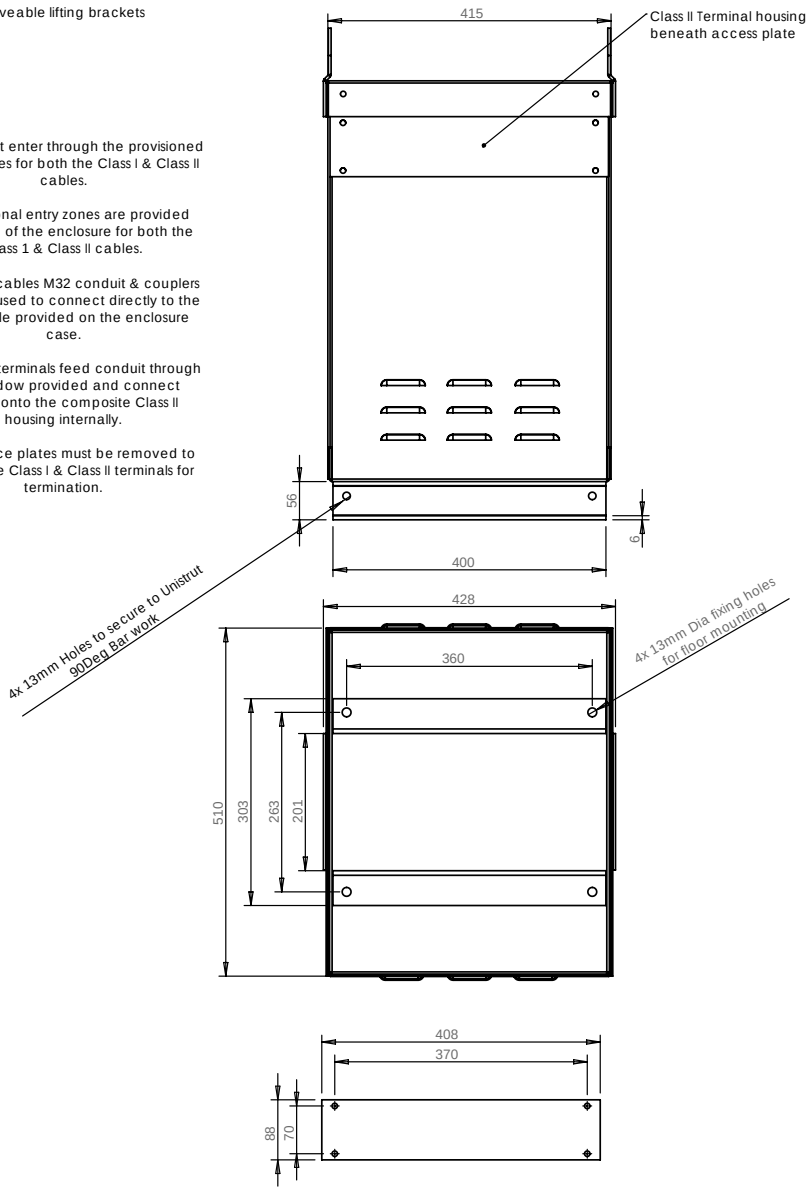

NOTE 1: 2x Removeable access plates

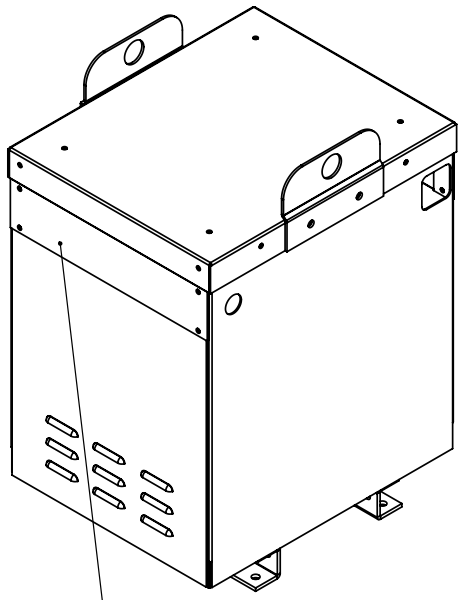

2 x Removeable service plates for Access to Class I Terminals & Class II Terminal Housing.

Certificate of Acceptance PA05/06391

Manufacturer:

ATL Transformers Ltd.

Issue : 5
Valid From : 15/05/2020
Review Date: 14/05/2025

Aluminium Wound Class II Hybrid FSP Isolating Transformers

Product Description

Range of Aluminium wound Class II Hybrid Isolating transformers in accordance with NR/L2/SIGELP/30007 – Product Specification for Power Transformers for Signalling Systems.

For use in Signalling Power Distribution Systems.

Transformer range comprises:

Aluminium wound transformers 1000VA, 1500VA, 2000VA, 3000VA, 5000VA and 10000VA with one secondary winding;

Aluminium wound transformer 1000VA with two secondary windings;

Aluminium wound transformers 1400VA and 2000VA with four secondary windings.

Product Image

Scope of Acceptance

Full Acceptance

For use in new and updated Signalling Power Distribution Systems.

Suitable for replacement of 924A transformers in accordance with NR/L2/SIGELP/27410 Issue 2 – Specification for Class II based Signalling Power Distribution Systems.

Refer to Manufacturers and Users Conditions for further information and constraints of use.

Network Rail Acceptance Panel (NRAP) hereby authorises the product above for use and trial use on railway infrastructure for which Network Rail is the Infrastructure Manager.

Reviewed by:	Authorised by:	
Samantha Flint Product Acceptance Coordinator	Jerry Morling Head of Signalling	Felix Langley Professional Head of Power Distribution HV/LV

Certificate of Acceptance

OFFICIAL
PA05/05761

Manufacturer:
ATL Transformers LTD

Issue : 4
Valid From : 20/05/2022

Copper Wound Class II Hybrid FSP Isolating Transformers

Product Description

A range of Copper Wound Class II Hybrid FSP Isolating Transformers for Signalling Power Supplies.

Product Image

Scope of Acceptance

Full Acceptance

.
The eco-rail Class II Hybrid Transformers meets the requirements of NR/L2/SIG/30007 - Product Specification for Power Transformers for Signalling Systems.

When utilised in Class II applications these transformers shall be used, installed and tested in accordance with NR/L2/ELP/27410 - Specification for Class II Based Signalling Power Distribution Systems.

Suitable for replacement of 924A transformers in accordance with NR/L2/SIGELP/27410 Issue 2 – Specification for Class II based Signalling Power Distribution Systems.

Refer to Manufacturers and Users conditions for further information and constraints.

Network Rail Acceptance Panel (NRAP) hereby authorises the product above for use and trial use on railway infrastructure for which Network Rail is the Infrastructure Manager under the ROGS regulations.

Reviewed by:	Authorised by:	Authorised by:
Steven Rennolds Product Acceptance Specialist	Felix Langley Network Technical Head Power Distribution HV/LV	Jerry Morling BEng MSc CEng MIET, MIRSE Network Technical Head Signalling

Please contact technologyintroduction@networkrail.co.uk

Network Rail Infrastructure Ltd Registered Office 1 Eversholt Street, Euston, London Registered in England and Wales No. 2904587 www.networkrail.co.uk
Version 6.1 February 2013

Certificate of Acceptance PA05/06329

Manufacturer:
ATL Transformers Ltd

Issue : 2
Valid From : 06-03-20

Class II Hybrid Transformer-rectifiers

Product Description

A range of Class II Hybrid low inrush transformer-rectifier units. These units are suitable for powering Signalling loads and point machines

Product Image

Scope of Acceptance

Full Acceptance

Can be used where the Signalling Power Distribution is Class I or Class II subject to the Specific Conditions defined in this certificate.

They shall not be used in sub-surface environments in accordance with section 12 stations and locations.

Network Rail Acceptance Panel (NRAP) hereby authorises the product above for use and trial use on railway infrastructure for which Network Rail is the Infrastructure Manager under the ROGS regulations.

Reviewed by:

Samantha Flint
Product Acceptance Coordinator

Authorised by:

Felix Langley
Professional Head of Power Distribution HV/LV

PP

Jerry Morling BEng MSc CEng MIET, MIRSE
Professional Head of Signalling

Please contact technologyintroduction@networkrail.co.uk

Network Rail Infrastructure Ltd Registered Office 1 Eversholt Street London NW12EE Registered in England and Wales No. 2904587 www.networkrail.co.uk
Version 7.0 April 2015.

Network Rail Accepted
Product: PA05/07022

DATASHEET BROCHURE
ASP/PSP Transformers

- IP32 & IP56 Principle (PSP) and Auxiliary (ASP) supply point Transformers

A New Generation of IP56 Lighter, Compact and aesthetically pleasing PSP/ASP Transformers with enhanced performance characteristics for a modern railway network.

Aluminium PSP/ASP Transformers

IP32

ATL's PSP/ASP range of transformers has been designed to meet the requirements of previous British rail standards BR924A but enhanced for a modern railway with elements of up to date standards IEC600076 & NR/L2/SIGELP/30007. During development ATL sought advice from maintainers and installers to engineer tangible benefits to not only the system but the operators of this equipment. Principle supply point transformers supply power to the downstream feeders and functional supply point circuits. Typically of Class I designation these units serve a critical power delivery function to the IT systems. Available in three phase, single phase & three to single phase with a stable of multiple power variations. ATL offer an array of voltage configurations to suit multi regional distribution networks and system topologies.

KEY FEATURES

- ATL's Lightweight aluminium windings are the lightest and most compact specifications available.
- Delivering < 10x Inrush Current.
- Reduced footprint to free up valuable floor space within a PSP/ASP structure.
- Suitable for installation in line with switchboard panels.
- Simple installation by way of removable cable gland plates for both Primary & Secondary cables.
- Impedance values < 5%
- On-Load Tap changer with lockable handles to facilitate voltage Buck and Boost while the system is energised.
- The ability to reset or boost system voltages on long feeders.
- ATL's innovative custom enclosure design drives cooling through convection and offers enhanced asset life and environmental resilience.
- Available in both IP32 (Indoor) and IP56 (Outdoor) variations.

On-Load Tap Changer

An on-load tap selector allows simple switching between the transformer's tap voltages.

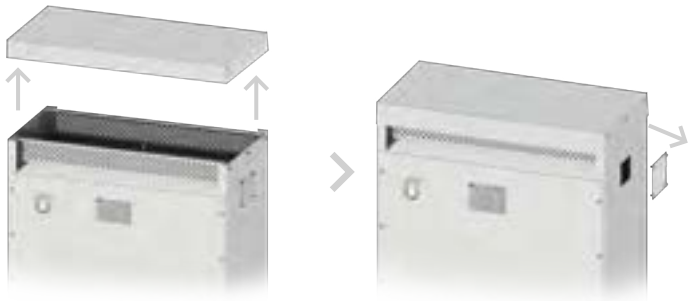

Ease of Access

Removal of lid and gland plates make light work of cable entry and termination for the installer and maintainer.

Get In Line

RECLAIM FLOOR SPACE WITHIN YOUR PSP

A Transformer should look as good as and be in keeping with the equipment it is installed into. ATL's In-Line range not only outperform others but are aesthetically better looking and with our novel design facilitate in-line installation with switchboard panels. No further need to have large Grey box's in the corner of your PSP. Free up your premium floorspace with our extensive stable of high performing PSP/ASP

Light Weight Aluminium

eco - rail® ALUMINIUM Technology Inside

Powered By ATL Transformers Ltd

As with our New generation of Signalling transformers our eco-rail aluminium technology is available across the full PSP/ASP range. Lighter is in this case better and we offer this feature also within a smaller package to conventional copper wound transformers. We are able to achieve this due to our high efficiency and novel mechanical design.

Aluminium is the future of electrical conductors and while our competitors are still figuring it out ATL have been delivering the benefits of aluminium wound transformers to our customers for over 20 years. Going with the conventional is easy but we like to challenge the conventional at ATL and innovate where possible and this is certainly shown within our market leading range of PSP/ASP transformers.

Aluminium
PSP/ASP Transformers

IP56

ATL's PSP/ASP range of transformers has been designed to meet the requirements of previous British rail standards BR924A but enhanced for a modern railway with elements of up to date standards IEC600076 & NR/L2/SIGELP/30007. During development ATL sought advice from maintainers and installers to engineer tangible benefits to not only the system but the operators of this equipment. Principle supply point transformers supply power to the downstream feeders and functional supply point circuits. Typically of Class I designation these units serve a critical power delivery function to the IT systems. Available in three phase, single phase & three to single phase with a stable of multiple power variations. ATL offer an array of voltage configurations to suit multi regional distribution networks and system topologies.

Weatherproof Coating

KEY FEATURES

- ATL's Lightweight aluminium windings are the lightest and most compact specifications available.
- Delivering < 10x Inrush Current.
- Suitable for installation in line with switchboard panels.
- Simple installation by way of removable cable gland plates for both Primary & Secondary cables located underneath enclosure doors.
- Impedance values < 5%
- The ability to reset or boost system voltages on long feeders.
- ATL's innovative custom enclosure design drives cooling through convection and offers enhanced asset life and environmental resilience.
- Stainless Steel IP56 enclosures with Weatherproof Coating for Outdoor Applications.

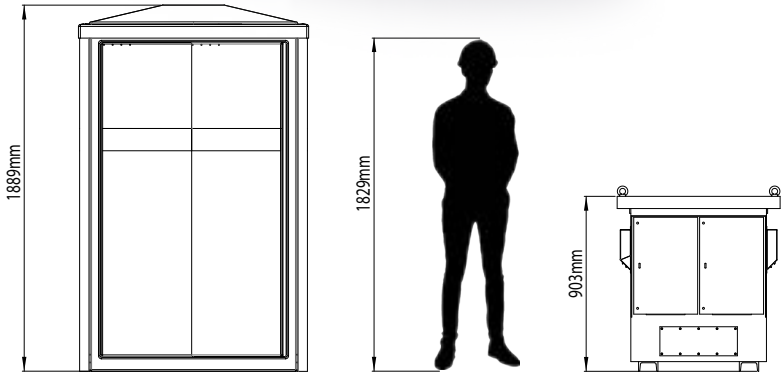

Compact and Lightweight

The ASP/PSP has just a height of 903mm which is almost half the size of 6ft human being. *40KVA may

Ease of Access

The ASP/PSP contains doors for simple access and removable gland plates underneath for fitting conduit cable through.

Compact

Compact Outdoor PSP

A Transformer should look as good as and be in keeping with the equipment it is installed into. ATL's In-Line range not only outperform others but are aesthetically better looking and with our novel design facilitate. The ATL outdoor PSP transformer range is a cost effective solution for feeder power systems. They feature external distribution housings for efficient termination of cables without accessing the main enclosure compartment.

Light Weight Aluminium

eco - rail® ALUMINIUM Technology Inside

Powered By ATL Transformers Ltd

As with our New generation of Signalling transformers our eco-rail aluminium technology is available across the full PSP/ASP range. Lighter is in this case better and we offer this feature also within a smaller package to conventional copper wound transformers. We are able to achieve this due to our high efficiency and novel mechanical design.

Aluminium is the future of electrical conductors and while our competitors are still figuring it out ATL have been delivering the benefits of aluminium wound transformers to our customers for over 20 years. Going with the conventional is easy but we like to challenge the conventional at ATL and innovate where possible and this is certainly shown within our market leading range of PSP/ASP transformers.

Data Specification
BI Phase 400/650V

	Rating	5KVA	10KVA	15KVA	20KVA	25KVA	30KVA
	IP32 Part Number	T2987	T2909	T3077	T2910	T3078	T2911
	IP56 Part Number	-	T2909-SPIP56	T3077-SPIP56	T2910-SPIP56	T3078-SPIP56	T2911-SPIP56
	IP32 PAD's Number**	0054/215008	0054/215009	0054/215010	0054/215011	0054/215012	0054/215013
Equipment Classification	Primary Winding Classification	Class I	Class I	Class I	Class I	Class I	Class I
	Secondary Winding Classification	Class I	Class I	Class I	Class I	Class I	Class I
	Winding Conductor	Aluminium	Aluminium	Aluminium	Aluminium	Aluminium	Aluminium
Input	Primary rated voltage (V)	400	400	400	400	400	400
	Recommended protection	20A Type C or D	40A Type C or D	50A Type C or D	70A Type C or D	80A Type C or D	100A Type C or D
	% Efficiency @ 100% FL	>95%	>95%	>95%	>95%	>95%	>95%
	Inrush (x times rated current)	7.4 X flc	8.6 x Flc	5.5 x Flc	5.1 x Flc	5.4 x Flc	8.9 x Flc
	% Impedance	< 3%	< 5%	< 5%	< 5%	< 5%	< 5%
	X/R Ratio	0.62	0.65	0.65	1.11	2.1	1.26
Output	Secondary rated voltage (V)	650	650	650	650	650	650
	Secondary taps	+/- 2.5,5,7.5%	+/- 2.5,5,7.5%	+/- 2.5,5,7.5%	+/- 2.5,5,7.5%	+/- 2.5,5,7.5%	+/- 2.5,5,7.5%
	Prospective fault current (A)	132	440	598	920	843	1570
	Duration of prospective fault current	>4 seconds	>4 Seconds	>4 Seconds	>4 Seconds	>4 Seconds	>4 Seconds
	% Regulation	<3%	<3%	<3%	<3%	<3%	<3%
	Insulation Resistance (Ω)	Primary to Core >100M Ω Secondary to Core >100M Ω Primary to Secondary >100M Ω					
	IP32 Weight (kg)	87	150	190	215	240	310
	IP56 Weight (kg)	-	260	310	370	400	465

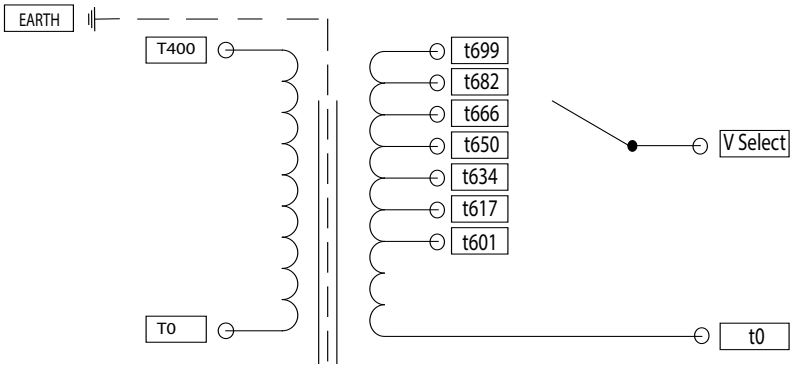

Wiring Diagram

Data Specification
BI Phase 400/650V

	Rating	35KVA	40KVA	50KVA	60KVA	80KVA
	IP32 Part Number	T3079	T2912	T3103	T2913	T3320
	IP56 Part Number	T3079-SPIP56	T2912-SPIP56	T3103-SPIP56	T2913-SPIP56	T3320-SPIP56
	IP32 PAD's Number**	0054/215014	0054/215015	0054/215016	0054/215017	0054/215018
Equipment Classification	Primary Winding Classification	Class I	Class I	Class I	Class I	Class I
	Secondary Winding Classification	Class I	Class I	Class I	Class I	Class I
	Winding Conductor	Aluminium	Aluminium	Aluminium	Aluminium	Aluminium
Input	Primary rated voltage (V)	400	400	400	400	400
	Recommended protection	125A Type C or D	150A Type C or D	175A Type C or D	200A Type C or D	300A Type C or D
	% Efficiency @ 100% FL	>95%	>95%	>95%	>95%	>95%
	Inrush (x times rated current)	6.5 x Flc	8.5 x Flc	6.4 x Flc	7.5 x Flc	8.4 x Flc
	% Impedance	< 5%	< 5%	< 5%	< 5%	< 5%
	X/R Ratio	1.16	1.7	2	2.12	1.85
Output	Secondary rated voltage (V)	650	650	650	650	650
	Secondary taps	+/- 2.5,5,7.5%	+/- 2.5,5,7.5%	+/- 2.5,5,7.5%	+/- 2.5,5,7.5%	+/- 2.5,5,7.5%
	Prospective fault current (A)	1692	1856	2244	2582	3538
	Duration of prospective fault current	>4 Seconds	>4 Seconds	>4 Seconds	>4 Seconds	>4 Seconds
	% Regulation	<3%	<3%	<3%	<3%	<3%
	Insulation Resistance (Ω)	Primary to Core *>100M Ω* Secondary to Core *>100M Ω* Primary to Secondary *>100M Ω*				
	IP32 Weight (kg)	310	390	450	500	555
	IP56 Weight (kg)	490	500	525	545	625

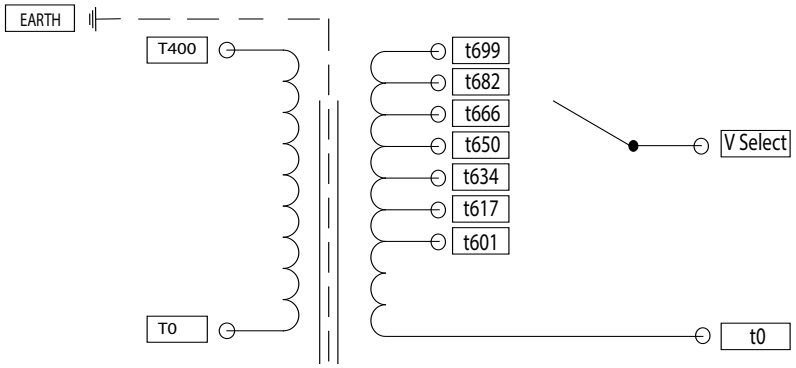

Wiring Diagram

Data Specification
BI Phase 230/650V

	Rating	5KVA	10KVA	15KVA	20KVA	25KVA	30KVA
	IP32 Part Number	T2987-1	T2909-1	T3077-1	T2910-1	T3078-1	T2911-1
	IP56 Part Number	-	T2909-1-SPIP56	T3077-1-SPIP56	T2910-1-SPIP56	T3078-1-SPIP56	T2911-1-SPIP56
	IP32 PAD's Number**	0054/215019	0054/215020	0054/215021	0054/215022	0054/215023	0054/215024
Equipment Classification	Primary Winding Classification	Class I	Class I	Class I	Class I	Class I	Class I
	Secondary Winding Classification	Class I	Class I	Class I	Class I	Class I	Class I
	Winding Conductor	Aluminium	Aluminium	Aluminium	Aluminium	Aluminium	Aluminium
Input	Primary rated voltage (V)	230	230	230	230	230	230
	Recommended protection	32A Type C or D	60A Type C or D	90A Type C or D	125A Type C or D	150A Type C or D	175A Type C or D
	% Efficiency @ 100% FL	>95%	>95%	>95%	>95%	>95%	>95%
	Inrush (x times rated current)	< 10 x flc	8.7 x Flc	5 x Flc	9 x Flc	7.9 x Flc	7.9 x Flc
	% Impedance	< 5%	< 5%	< 5%	< 5%	< 5%	< 5%
	X/R Ratio	-	0.66	0.92	1.13	1.51	1.39
Output	Secondary rated voltage (V)	230	650	650	650	650	650
	Secondary taps	+/- 2.5,5,7.5%	+/- 2.5,5,7.5%	+/- 2.5,5,7.5%	+/- 2.5,5,7.5%	+/- 2.5,5,7.5%	+/- 2.5,5,7.5%
	Prospective fault current (A)	-	394	626	1188	1740	1450
	Duration of prospective fault current	>4 Seconds	>4 Seconds	>4 Seconds	>4 Seconds	>4 Seconds	>4 Seconds
	% Regulation	<4%	<3%	<3%	<3%	<3%	<3%
	Insulation Resistance (Ω)	Primary to Core >100M Ω Secondary to Core >100M Ω Primary to Secondary >100M Ω					
	IP32 Weight (kg)	87	150	190	215	240	310
	IP56 Weight (kg)	-	260	310	370	400	465

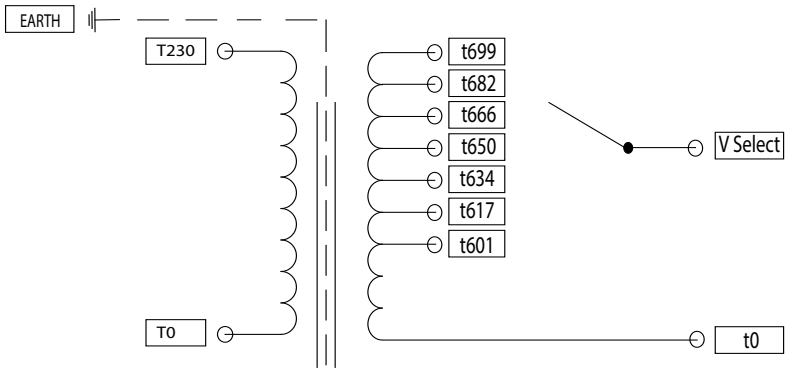

Wiring Diagram

Data Specification
BI Phase 230/650V

	Rating	35KVA	40KVA	50KVA	60KVA	80KVA
	IP32 Part Number	**T3079-1**	**T2912-1**	**T3103-1**	**T2913-1**	**T3320-1**
	IP56 Part Number	**T3079-1-SPIP56**	**T2912-1-SPIP56**	**T3103-1-SPIP56**	**T2913-1-SPIP56**	**T3320-1-SPIP56**
	IP32 PAD's Number**	**0054/215025**	**0054/215026**	**0054/215027**	**0054/215028**	**0054/215029**
Equipment Classification	Primary Winding Classification	Class I	Class I	Class I	Class I	Class I
	Secondary Winding Classification	Class I	Class I	Class I	Class I	Class I
	Winding Conductor	Aluminium	Aluminium	Aluminium	Aluminium	Aluminium
Input	Primary rated voltage (V)	230	230	230	230	230
	Recommended protection	200A Type C or D	225A Type C or D	300A Type C or D	350A Type C or D	450A Type C or D
	% Efficiency @ 100% FL	>95%	>95%	>95%	>95%	>95%
	Inrush (x times rated current)	<10 x Flc	<10 x Flc	5.8 x Flc	<10 x Flc	<10 x Flc
	% Impedance	< 5%	< 5%	< 5%	< 5%	< 5%
	X/R Ratio	-	-	1.26	-	-
Output	Secondary rated voltage (V)	650	650	650	650	650
	Secondary taps	+/- 2.5,5,7.5%	+/- 2.5,5,7.5%	+/- 2.5,5,7.5%	+/- 2.5,5,7.5%	+/- 2.5,5,7.5%
	Prospective fault current (A)	1582	-	1998	-	-
	Duration of prospective fault current	>4 Seconds	>4 Seconds	>4 Seconds	>4 Seconds	>4 Seconds
	% Regulation	<3%	<3%	<3%	<3%	<3%
	Insulation Resistance (Ω)	Primary to Core *>100M Ω* Secondary to Core *>100M Ω* Primary to Secondary *>100M Ω*				
IP32 Weight (kg)		310	390	450	500	555
IP56 Weight (kg)		490	500	525	545	625

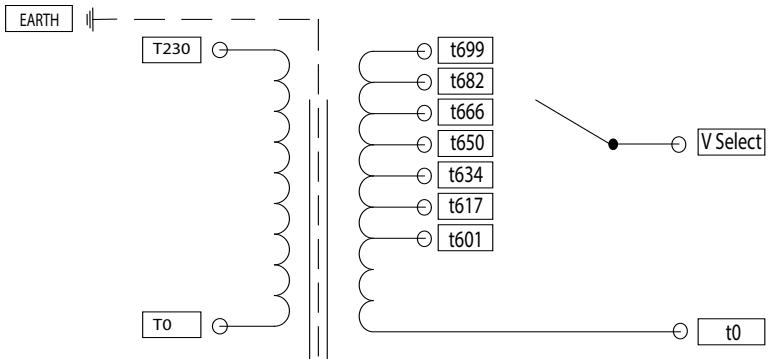

Wiring Diagram

Data Specification
BI Phase 650/650V

Rating		5KVA	10KVA	15KVA	20KVA	25KVA	30KVA
IP32 Part Number		T2987-2	T2909-2	T3077-2	T2910-2	T3078-2	T2911-2
IP56 Part Number		-	T2909-2-SPIP56	T3077-2-SPIP56	T2910-2-SPIP56	T3078-2-SPIP56	T2911-2-SPIP56
IP32 PAD's Number**		0054/215030	0054/215031	0054/215032	0054/215033	0054/215034	0054/215035
Equipment Classification	Primary Winding Classification	Class I	Class I	Class I	Class I	Class I	Class I
	Secondary Winding Classification	Class I	Class I	Class I	Class I	Class I	Class I
	Winding Conductor	Aluminium	Aluminium	Aluminium	Aluminium	Aluminium	Aluminium
Input	Primary rated voltage (V)	650	650	650	650	650	650
	Recommended protection	16A Type C or D	20A Type C or D	35A Type C or D	40A Type C or D	50A Type C or D	60A Type C or D
	% Efficiency @ 100% FL	>95%	>95%	>95%	>95%	>95%	>95%
	Inrush (x times rated current)	< 10 x flc	8.7 x Flc	<10 x Flc	<10 x Flc	<10 x Flc	<10 x Flc
	% Impedance	< 5%	< 5%	< 5%	< 5%	< 5%	< 5%
	X/R Ratio		0.66	-	-	-	--
Output	Secondary rated voltage (V)	230	650	650	650	650	650
	Secondary taps	+/- 2.5,5,7.5%	+/- 2.5,5,7.5%	+/- 2.5,5,7.5%	+/- 2.5,5,7.5%	+/- 2.5,5,7.5%	+/- 2.5,5,7.5%
	Prospective fault current (A)	-	392	-	-	-	-
	Duration of prospective fault current	-	>4 Seconds	>4 Seconds	>4 Seconds	>4 Seconds	>4 Seconds
	% Regulation	-	<3%	<3%	<3%	<3%	<3%
	Insulation Resistance (Ω)	Primary to Core *>100M Ω* Secondary to Core *>100M Ω* Primary to Secondary *>100M Ω*					
IP32 Weight (kg)		87	150	190	215	240	310
IP56 Weight (kg)		-	260	310	370	400	465

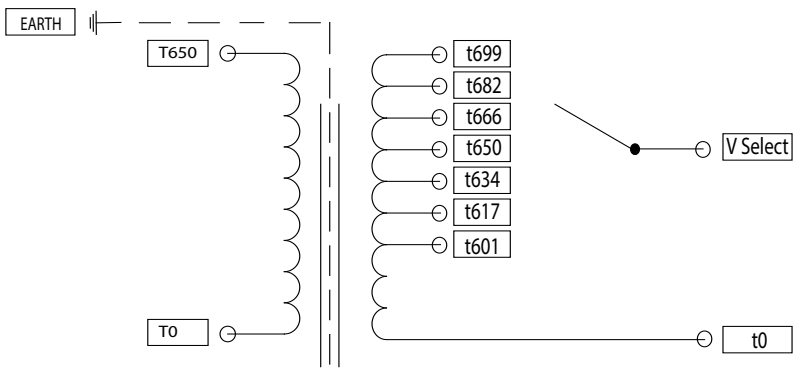

Wiring Diagram

Data Specification
BI Phase 650/650V

	Rating	35KVA	40KVA	50KVA	60KVA	80KVA
	IP32 Part Number	T3079-2	T2912-2	T3103-2	T2913-2	T3320-2
	IP56 Part Number	T3079-2-SPIP56	T2912-2-SPIP56	T3103-2-SPIP56	T2913-2-SPIP56	T3320-2-SPIP56
	IP32 PAD's Number**	0054/215036	0054/215037	0054/215038	0054/215039	0054/215040
Equipment Classification	Primary Winding Classification	Class I	Class I	Class I	Class I	Class I
	Secondary Winding Classification	Class I	Class I	Class I	Class I	Class I
	Winding Conductor	Aluminium	Aluminium	Aluminium	Aluminium	Aluminium
Input	Primary rated voltage (V)	650	650	650	650	650
	Recommended protection	70A Type C or D	80A Type C or D	100A Type C or D	125A Type C or D	175A Type C or D
	% Efficiency @ 100% FL	>95%	>95%	>95%	>95%	>95%
	Inrush (x times rated current)	<10 x Flc	<10 x Flc	<10 x Flc	<10 x Flc	<10 x Flc
	% Impedance	< 5%	< 5%	< 5%	< 5%	< 5%
	X/R Ratio	-	-	-	-	-
Output	Secondary rated voltage (V)	650	650	650	650	650
	Secondary taps	+/- 2.5,5,7.5%	+/- 2.5,5,7.5%	+/- 2.5,5,7.5%	+/- 2.5,5,7.5%	+/- 2.5,5,7.5%
	Prospective fault current (A)	-	-	-	-	-
	Duration of prospective fault current	>4 Seconds	>4 Seconds	>4 Seconds	>4 Seconds	>4 Seconds
	% Regulation	<3%	<3%	<3%	<3%	<3%
	Insulation Resistance (Ω)	Primary to Core >100M Ω Secondary to Core >100M Ω Primary to Secondary >100M Ω				
	IP32 Weight (kg)	310	390	450	500	555
	IP56 Weight (kg)	490	500	525	545	625

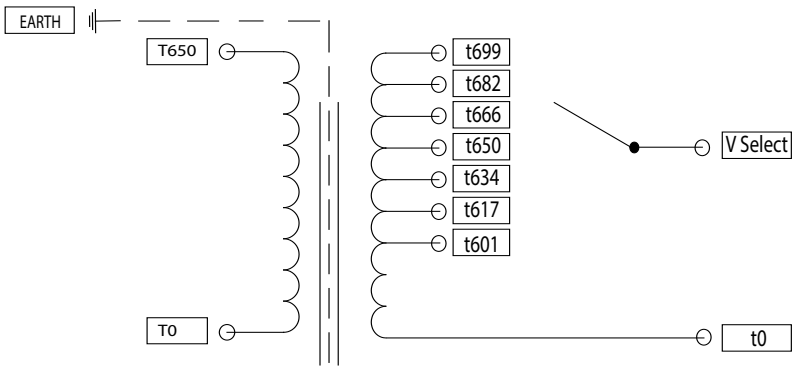

Wiring Diagram

Data Specification
BI Phase 400/230V

Rating		5KVA	10KVA	15KVA	20KVA	25KVA	30KVA
IP32 Part Number		T2987-3	T2909-3	T3077-3	T2910-3	T3078-3	T2911-3
IP56 Part Number		-	T2909-3-SPIP56	T3077-3-SPIP56	T2910-3-SPIP56	T3078-3-SPIP56	T2911-3-SPIP56
IP32 PAD's Number**		0054/215041	0054/215042	0054/215043	0054/215044	0054/215045	0054/215046
Equipment Classification	Primary Winding Classification	Class I	Class I	Class I	Class I	Class I	Class I
	Secondary Winding Classification	Class I	Class I	Class I	Class I	Class I	Class I
	Winding Conductor	Aluminium	Aluminium	Aluminium	Aluminium	Aluminium	Aluminium
Input	Primary rated voltage (V)	400	400V	400V	400V	400V	400V
	Primary taps	+/- 2.5,5,7.5%	+/- 2.5,5,7.5%	+/- 2.5,5,7.5%	+/- 2.5,5,7.5%	+/- 2.5,5,7.5%	+/- 2.5,5,7.5%
	Recommended protection	20A Type C or D	35A Type C or D	50A Type C or D	70A Type C or D	80A Type C or D	100A Type C or D
	% Efficiency @ 100% FL	>95%	>97%	>97%	>97%	>97%	>97%
	Inrush (x times rated current)	<10 x Flc	<10 x Flc	<10 x Flc	<10 x Flc	7.2 x Flc	<10 x Flc
	% Impedance	< 5%	< 5%	< 5%	< 5%	< 5%	< 5%
Output	Secondary rated voltage (V)	230	230	230	230	230	230
	X/R Ratio	-	-	-	-	1.04	-
	Prospective fault current (A)	-	-	-	-	5430	-
	Duration of prospective fault current	>4 Seconds	>4 Seconds	>4 Seconds	>4 Seconds	>4 Seconds	>4 Seconds
	% Regulation	<3%	<3%	<3%	<3%	<3%	<3%
	Insulation Resistance (Ω)	Primary to Core *>100M Ω* Secondary to Core *>100M Ω* Primary to Secondary *>100M Ω*					
IP32 Weight (kg)		87	150	190	215	240	310
IP56 Weight (kg)		-	260	310	370	400	465

Wiring Diagram

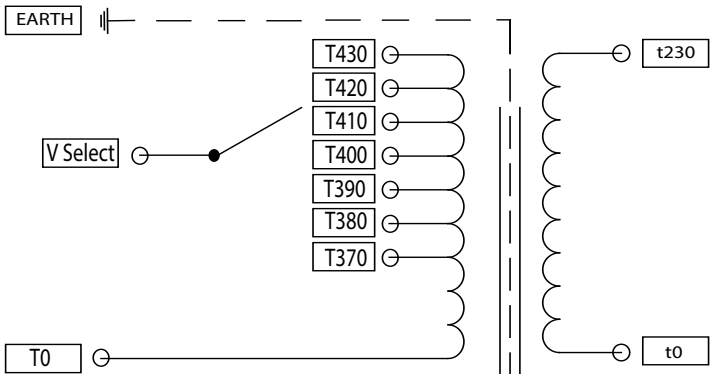

Data Specification
BI Phase 400/230V

Rating		35KVA	40KVA	50KVA	60KVA	80KVA
IP32 Part Number		**T3079-3**	**T2912-3**	**T3103-3**	**T2913-3**	**T3320-3**
IP56 Part Number		**T3079-3-SPIP56**	**T2912-3-SPIP56**	**T3103-3-SPIP56**	**T2913-3-SPIP56**	**T3320-3-SPIP56**
IP32 PAD's Number**		**0054/215047**	**0054/215048**	**0054/215049**	**0054/215050**	**0054/215051**
Equipment Classification	Primary Winding Classification	Class I	Class I	Class I	Class I	Class I
	Secondary Winding Classification	Class I	Class I	Class I	Class I	Class I
	Winding Conductor	Aluminium	Aluminium	Aluminium	Aluminium	Aluminium
Input	Primary rated voltage (V)	400V	400V	400V	400V	400V
	Primary taps	+/- 2.5,5,7.5%	+/- 2.5,5,7.5%	+/- 2.5,5,7.5%	+/- 2.5,5,7.5%	+/- 2.5,5,7.5%
	Recommended protection	125A Type C or D	150A Type C or D	175A Type C or D	200A Type C or D	300A Type C or D
	% Efficiency @ 100% FL	>97%	>97%	>97%	>97%	>97%
	Inrush (x times rated current)	8 x Flc	<10 x Flc	TBA	TBA	TBA
	% Impedance	< 5%	< 5%	< 5%	< 5%	< 5%
Output	Secondary rated voltage (V)	230	230	230	230	230
	X/R Ratio	0.87	-	-	-	-
	Prospective fault current (A)	9376	-	-	-	-
	Duration of prospective fault current	>4 Seconds	>4 Seconds	>4 Seconds	>4 Seconds	>4 Seconds
	% Regulation	<3%	<3%	<3%	<3%	<3%
	Insulation Resistance (Ω)	Primary to Core *>100M Ω* Secondary to Core *>100M Ω* Primary to Secondary *>100M Ω*				
IP32 Weight (kg)		310	390	450	500	555
IP56 Weight (kg)		490	500	525	545	625

Wiring Diagram

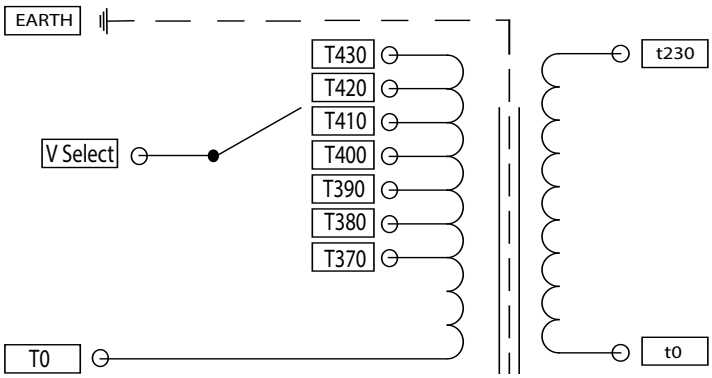

Data Specification
BI Phase 230/230V

Rating		5KVA	10KVA	15KVA	20KVA	25KVA	30KVA
IP32 Part Number		T2987-4	T2909-4	T3077-4	T2910-4	T3078-4	T2911-4
IP56 Part Number		-	T2909-4-SPIP56	T3077-4-SPIP56	T2910-4-SPIP56	T3078-4-SPIP56	T2911-4-SPIP56
IP32 PAD's Number**		0054/215052	0054/215053	0054/215054	0054/21505	0054/215056	0054/215057
Equipment Classification	Primary Winding Classification	Class I	Class I	Class I	Class I	Class I	Class I
	Secondary Winding Classification	Class I	Class I	Class I	Class I	Class I	Class I
	Winding Conductor	Aluminium	Aluminium	Aluminium	Aluminium	Aluminium	Aluminium
Input	Primary rated voltage (V)	230	230	230	230	230	230
	Recommended protection	32A Type C or D	60A Type C or D	90A Type C or D	125A Type C or D	150A Type C or D	175A Type C or D
	% Efficiency @ 100% FL	>95%	>97%	>97%	>97%	>97%	>97%
	Inrush (x times rated current)	<10 x Flc	8.29 x Flc	9 x Flc	<10 x Flc	7.13 x Flc	<10 x Flc
	% Impedance	< 5%	< 5%	< 5%	< 5%	< 5%	< 5%
	X/R Ratio	-	0.77	0.79	-	1.02	-
Output	Secondary rated voltage (V)	230	230	230	230	230	230
	Secondary taps	+/- 2.5,5,7.5%	+/- 2.5,5,7.5%	+/- 2.5,5,7.5%	+/- 2.5,5,7.5%	+/- 2.5,5,7.5%	+/- 2.5,5,7.5%
	Prospective fault current (A)	-	1076	1960	-	5392	-
	Duration of prospective fault current	>4 Seconds	>4 Seconds	>4 Seconds	>4 Seconds	>4 Seconds	>4 Seconds
	% Regulation	<3%	<3%	<3%	<3%	<3%	<3%
	Insulation Resistance (Ω)	Primary to Core *>100M Ω* Secondary to Core *>100M Ω* Primary to Secondary *>100M Ω*					
iP32 Weight (kg)		87	150	190	215	240	310
IP56 Weight (kg)		-	260	310	370	400	465

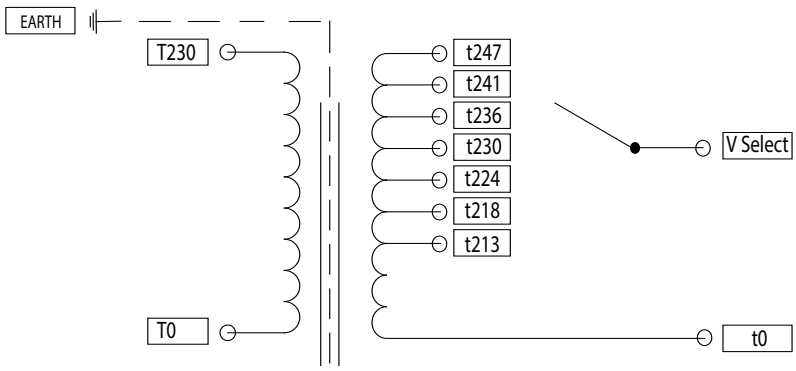

Wiring Diagram

Data Specification
BI Phase 230/230V

	Rating	35KVA	40KVA	50KVA	60KVA	80KVA
	IP32 Part Number	**T3079-4**	**T2912-4**	**T3103-4**	**T2913-4**	**T3320-4**
	IP56 Part Number	**T3079-4-SPIP56**	**T2912-4-SPIP56**	**T3103-4-SPIP56**	**T2913-4-SPIP56**	**T3320-4-SPIP56**
	IP32 PAD's Number**	**0054/215058**	**0054/215059**	**0054/215060**	**0054/215061**	**0054/215062**
Equipment Classification	Primary Winding Classification	Class I	Class I	Class I	Class I	Class I
	Secondary Winding Classification	Class I	Class I	Class I	Class I	Class I
	Winding Conductor	Aluminium	Aluminium	Aluminium	Aluminium	Aluminium
Input	Primary rated voltage (V)	230	230	230	230	230
	Recommended protection	200A Type C or D	225A Type C or D	300A Type C or D	350A Type C or D	450A Type C or D
	% Efficiency @ 100% FL	>97%	>97%	>97%	>97%	>97%
	Inrush (x times rated current)	<10 x Flc	<10 x Flc	TBA	TBA	TBA
	% Impedance	< 5%	< 5%	< 5%	< 5%	< 5%
	X/R Ratio					
Output	Secondary rated voltage (V)	230	230	230	230	230
	Secondary taps	+/- 2.5,5,7.5%	+/- 2.5,5,7.5%	+/- 2.5,5,7.5%	+/- 2.5,5,7.5%	+/- 2.5,5,7.5%
	Prospective fault current (A)	-	-	-	-	-
	Duration of prospective fault current	>4 Seconds	>4 Seconds	>4 Seconds	>4 Seconds	>4 Seconds
	% Regulation	<3%	<3%	<3%	<3%	<3%
	Insulation Resistance (Ω)	Primary to Core *>100M Ω* Secondary to Core *>100M Ω* Primary to Secondary *>100M Ω*				
iP32 Weight (kg)		310	390	450	500	555
IP56 Weight (kg)		490	500	525	545	625

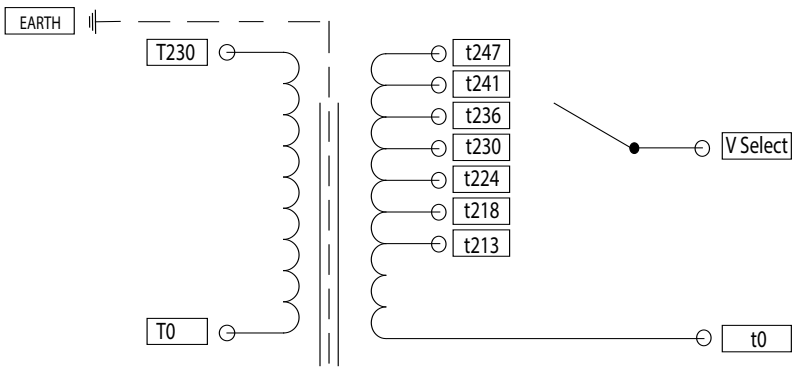

Wiring Diagram

Data Specification
BI Phase 650/230V

Rating		5KVA	10KVA	15KVA	20KVA	25KVA	30KVA
IP32 Part Number		**T2987-5**	**T2909-5**	**T3077-5**	**T2910-5**	**T3078-5**	**T2911-5**
IP56 Part Number		**-**	**T2909-5-SPIP56**	**T3077-5-SPIP56**	**T2910-5-SPIP56**	**T3078-5-SPIP56**	**T2911-5-SPIP56**
iP32 PAD's Number		**0054/215063**	**0054/215064**	**0054/215065**	**0054/215066**	**0054/215067**	**0054/215068**
Equipment Classification	Primary Winding Classification	Class I	Class I	Class I	Class I	Class I	Class I
	Secondary Winding Classification	Class I	Class I	Class I	Class I	Class I	Class I
	Winding Conductor	Aluminium	Aluminium	Aluminium	Aluminium	Aluminium	Aluminium
Input	Primary rated voltage (V)	650	650	650	650	650	650
	Primary taps	+/- 2.5,5,7.5%	+/- 2.5,5,7.5%	+/- 2.5,5,7.5%	+/- 2.5,5,7.5%	+/- 2.5,5,7.5%	+/- 2.5,5,7.5%
	Recommended protection	16A Type C or D	20A Type C or D	35A Type C or D	40A Type C or D	50A Type C or D	60A Type C or D
	% Efficiency @ 100% FL	>95%	>97%	>97%	>97%	>97%	>97%
	Inrush (x times rated current)	<10 x Flc	<10 x Flc	<10 x Flc	<10 x Flc	<10 x Flc	8.8 x Flc
	% Impedance	< 5%	< 5%	< 5%	< 5%	< 5%	< 5%
Output	Secondary rated voltage (V)	230	230	230	230	230	230
	X/R Ratio	-	-	-	-	-	0.99
	Prospective fault current (A)	-	-	-	-	-	2044
	Duration of prospective fault current	>4 Seconds	>4 Seconds	>4 Seconds	>4 Seconds	>4 Seconds	>4 Seconds
	% Regulation	<3%	<3%	<3%	<3%	<3%	<3%
	Insulation Resistance (Ω)	Primary to Core >*100M Ω* Secondary to Core>*100M Ω* Primary to Secondary>*100M Ω*					
iP32 Weight (kg)		87	150	190	215	240	310
IP56 Weight (kg)		**-**	260	310	370	400	465

Wiring Diagram

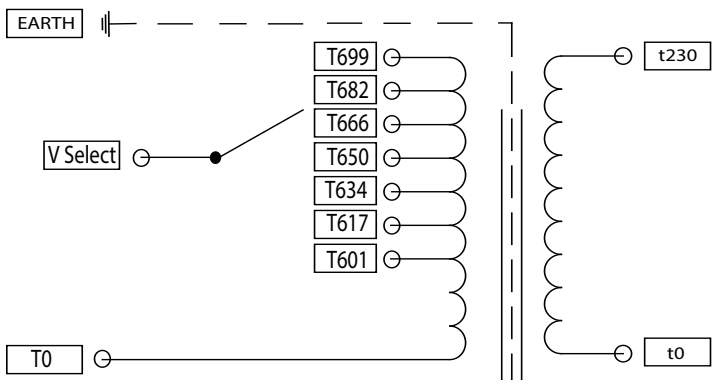

Data Specification
BI Phase 650/230V

Rating		35KVA	40KVA	50KVA	60KVA	80KVA
IP32 Part Number		**T3079-5**	**T2912-5**	**T3103-5**	**T2913-5**	**T3320-5**
IP56 Part Number		**T3079-5-SPIP56**	**T2912-5-SPIP56**	**T3103-5-SPIP56**	**T2913-5-SPIP56**	**T3320-5-SPIP56**
IP32 PAD's Number		**0054/215069**	**0054/215070**	**0054/215071**	**0054/215072**	**0054/215073**
Equipment Classification	Primary Winding Classification	Class I	Class I	Class I	Class I	Class I
	Secondary Winding Classification	Class I	Class I	Class I	Class I	Class I
	Winding Conductor	Aluminium	Aluminium	Aluminium	Aluminium	Aluminium
Input	Primary rated voltage (V)	650	650	650	650	650
	Primary taps	+/- 2.5,5,7.5%	+/- 2.5,5,7.5%	+/- 2.5,5,7.5%	+/- 2.5,5,7.5%	+/- 2.5,5,7.5%
	Recommended protection	70A Type C or D	80A Type C or D	100A Type C or D	125A Type C or D	175A Type C or D
	% Efficiency @ 100% FL	>>97%	>97%	>97%	>97%	>97%
	Inrush (x times rated current)	<10 x Flc	<10 x Flc	6.9 x Flc	TBA	TBA
	% Impedance	< 5%	< 5%	< 5%	< 5%	< 5%
Output	Secondary rated voltage (V)	230	230	230	230	230
	X/R Ratio	-	-	1.76	-	-
	Prospective fault current (A)	-	-	6430	-	-
	Duration of prospective fault current	>4 Seconds	>4 Seconds	>4 Seconds	>4 Seconds	>4 Seconds
	%Regulation	<3%	<3%	<3%	<3%	<3%
	Insulation Resistance (Ω)	Primary to Core *>100M Ω* Secondary to Core *>100M Ω* Primary to Secondary *>100M Ω*				
iP32 Weight (kg)		310	390	450	500	555
IP56 Weight (kg)		490	500	525	545	625

Wiring Diagram

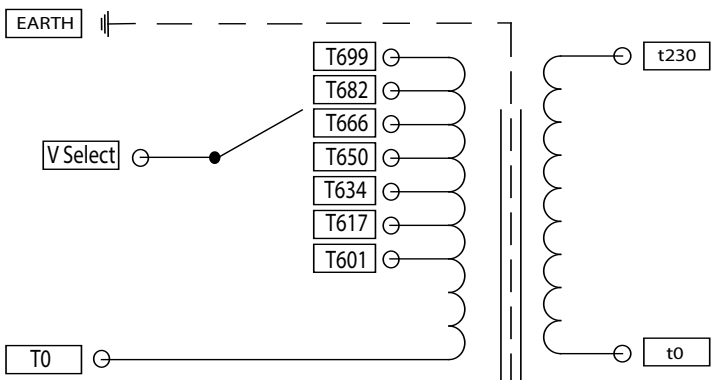

General Arrangements
IP32 BI Phase

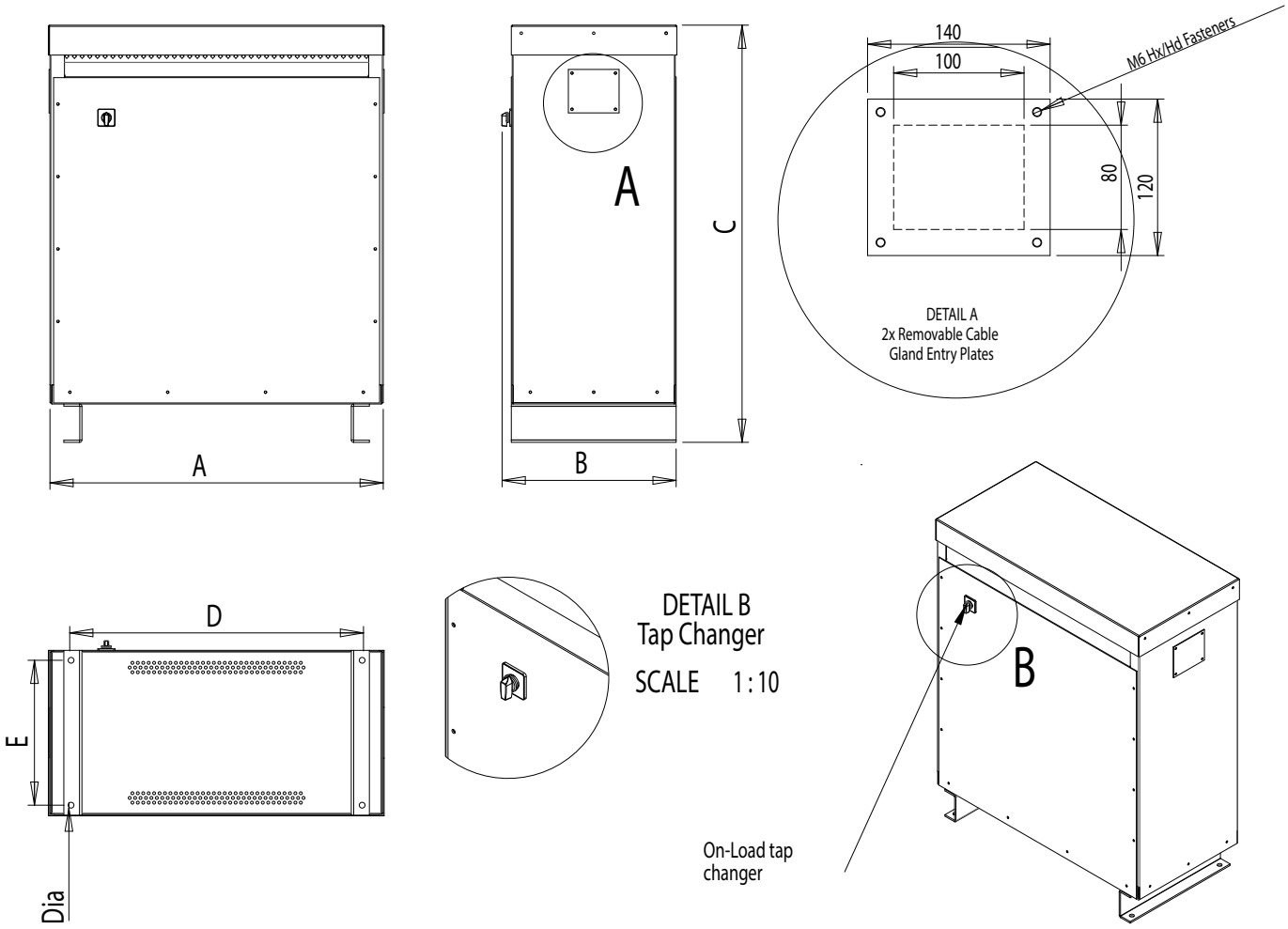

Single Phase						
Model	Dimension (mm)					
	A	B	C	D	E	Dia
5KVA	600	550	815	300	500	13**
10KVA	600	550	815	300	500	13**
15KVA	600	550	815	300	500	13**
20KVA	600	550	815	300	500	13**
25KVA	620	500	1100	450	400	16
30KVA	620	500	1100	450	400	16
35KVA	620	500	1100	450	400	16
40KVA	620	500	1100	450	400	16
50KVA	760	500	1100	530	400	16
60KVA	760	500	1100	530	400	16
80KVA	800	600	1200	600	500	16

*** Termination by way of DIN Screw Clamp or Stud terminals.**
All terminals located above the transformer, accessible by removal of enclosure lid.
****Holes sizes** can be requested to be a different size on request, please ask before making Order.
Ensure that all screws are replaced when securing the transformer lid and that all terminations have been made correctly. Cables should enter via the removable gland plates either side of the enclosure body. Gland plates should be drilled away from the transformer aligned to the required incoming cable conduit.

General Arrangements
IP56 BI Phase

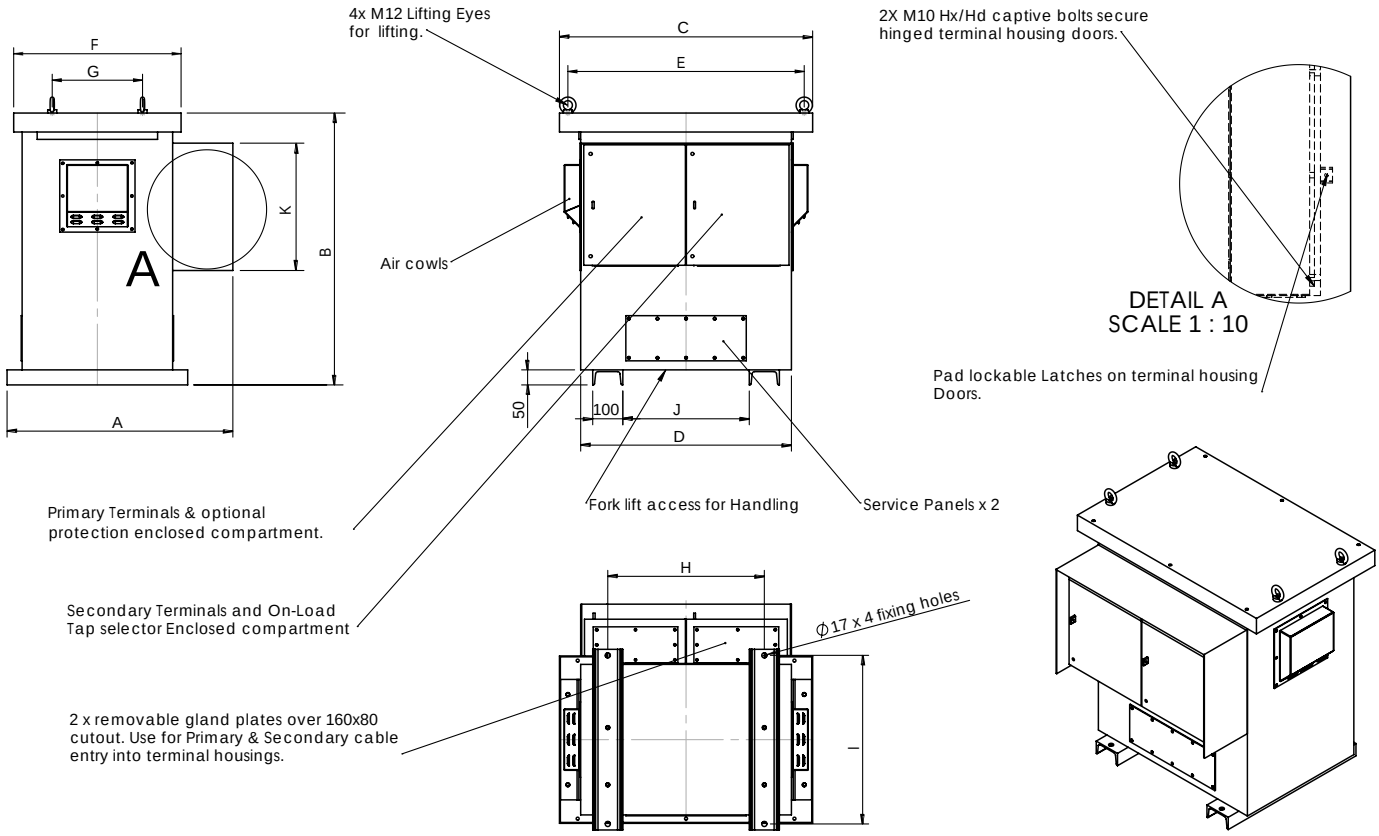

Note: GA applies to all Voltage Variants on Primary and Secondary

Note: Minimum Size for Bi Phase IP56 is 10KVA

Single Phase (Bi Phase)											
Model	Dimension (mm)										
	A	B	C	D	E	F	G	H	I	J	K
10KVA	750	903	841	700	785	556	300	300	560	200	500
15KVA	750	903	841	700	785	556	300	300	560	200	500
20KVA	750	903	841	700	785	556	300	300	560	200	500
20KVA	750	903	841	700	785	556	300	300	560	200	500
30KVA	860	903	841	700	785	666	300	430	670	330	500
35KVA	860	903	841	700	785	666	300	430	670	330	500
40KVA	860	903	841	700	785	666	300	430	670	330	500
50KVA	860	1105	1041	900	985	666	500	510	670	410	500
60KVA	860	1105	1041	900	985	666	500	510	670	410	500
80KVA	1000	1205	1191	1050	1135	810	600	590	810	380	600

Note: Specifying ATL Transformers in a project? 3D Models and 2D drawings available on request ready to be placed in to your drawing or 3D assembly.

*** Termination by way of DIN Screw Clamp or Stud terminals.**
All terminals located above the transformer, accessible by removal of enclosure lid.

Ensure that all screws are replaced when securing the transformer lid and that all terminations have been made correctly. Cables should enter via the removable gland plates either side of the enclosure body. Gland plates should be drilled away from the transformer aligned to the required incoming cable conduit.

Data Specification

Three Phase 400/650V

Delta/Star Vector Group

Rating		10KVA	20KVA	25KVA	30KVA	35KVA
IP32 Part Number		**T2914**	**T2961**	**T3116**	**T2915**	**T3334**
IP56 Part Number		**-**	**T2961-SPIP56**	**T3116-SPIP56**	**T2915-SPIP56**	**T3334-SPIP56**
IP32 PAD's Number		**0054/215074**	**0054/215075**	**0054/215076**	**0054/215077**	**0054/215078**
Equipment Classification	Primary Winding Classification	Class I	Class I	Class I	Class I	Class I
	Secondary Winding Classification	Class I	Class I	Class I	Class I	Class I
	Winding Conductor	Aluminium	Aluminium	Aluminium	Aluminium	Aluminium
Input	Primary rated voltage (V)	400V	400V	400V	400V	400V
	Primary taps	-	-	-	-	-
	Recommended protection	20A Type C or D	40A Type C or D	50A Type C or D	60A Type C or D	75A Type C or D
	% Efficiency	>97%	>97%	>97%	>97%	>97%
	Inrush (x times rated current)	8.3 x Flc	5.2 x Flc	5 x Flc	8.8 x Flc	4.73 x Flc
	% Impedance	< 5%	< 5%	< 5%	< 5%	< 5%
	X/R ratio	0.5	1.15	1.33	1.38	1.39
Output	Secondary rated voltage (V)	650	650	650	650	650
	Secondary taps	+/- 2.5, 5, 7.5%	+/- 2.5,5, 7.5%	+/- 2.5,5, 7.5%	+/- 2.5,5, 7.5%	+/- 2.5,5, 7.5%
	Prospective fault current (A)	435	611	537	1299	1141
	Duration of prospective fault current	>4 Seconds	>4 Seconds	>4 Seconds	>4 Seconds	>4 Seconds
	% Regulation	<3%	<3%	<3%	<3%	<3%
	Insulation Resistance (Ω)	Primary to Core *>100M Ω* Secondary to Core *>100M Ω* Primary to Secondary *>100M Ω*				
IP32 Weight (kg)		180	280	295	310	330
IP54 Weight (kg)		-	370	400	440	440

Vector Diagram	Wiring Diagram
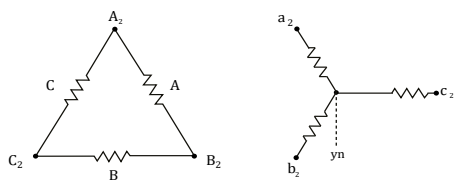	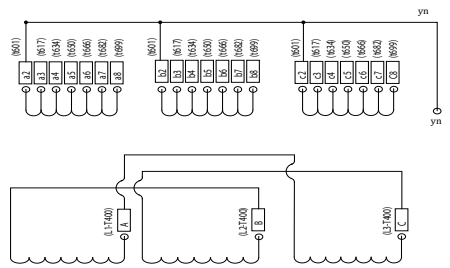

Data Specification

Three Phase 400/650V

Delta/Star Vector Group

Rating		40KVA	50KVA	60KVA	80KVA	100KVA	120KVA
IP32 Part Number		**T2962**	**T3058**	**T2963**	**T3027**	**T3758**	**T3143**
IP56 Part Number		**T2962-SPIP56**	**T3058-SPIP56**	**T2963-SPIP56**	**T3027-SPIP56**	**T3758-SPIP56**	**T3143-SPIP56**
IP32 PAD's Number		**0054/215079**	**0054/215080**	**0054/215081**	**0054/215082**	**0054/215108**	**0054/215083**
Equipment Classification	Primary Winding Classification	Class I	Class I	Class I	Class I	Class I	Class I
	Secondary Winding Classification	Class I	Class I	Class I	Class I	Class I	Class I
	Winding Conductor	Aluminium	Aluminium	Aluminium	Aluminium	Aluminium	Aluminium
Input	Primary rated voltage (V)	400V	400V	400V	400V	400V	400V
	Primary taps	-	-	-	-	-	-
	Recommended protection	125A Type C or D	150A Type C or D	200A Type C or D	250A Type C or D	355A Type C or D	400A Type C or D
	% Efficiency	>97%	>97%	>97%	>97%	>97%	>97%
	Inrush (x times rated current)	9 x Flc	8.8 x Flc	9 x Flc	8 x Flc	9 x Flc	<8.8 x Flc
	% Impedance	< 5%	< 5%	< 5%	< 5%	< 5%	< 5%
	X/R ratio	1.36	1.13	1.48	2.25	-	3
Output	Secondary rated voltage (V)	650	650	650	650	650	650
	Secondary taps	+/- 2.5,5, 7.5%	+/- 2.5,5, 7.5%	+/- 2.5,5, 7.5%	+/- 2.5,5, 7.5%	+/- 2.5,5, 7.5%	+/- 2.5,5, 7.5%
	Prospective fault current (A)	789	1699	1325	1792	1638	5230
	Duration of prospective fault current	>4 Seconds	>4 Seconds	>4 Seconds	>4 Seconds	>4 Seconds	>4 Seconds
	% Regulation	<3%	<3%	<3%	<3%	<3%	<3%
	Insulation Resistance (Ω)	Primary to Core *>100M Ω* Secondary to Core *>100M Ω* Primary to Secondary *>100M Ω*					
IP32 Weight (kg)		340	450	500	690	780	805
IP54 Weight (kg)		537	617	677	757	889	980

Vector Diagram	Wiring Diagram
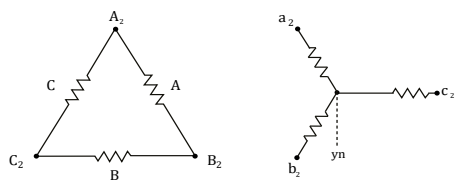	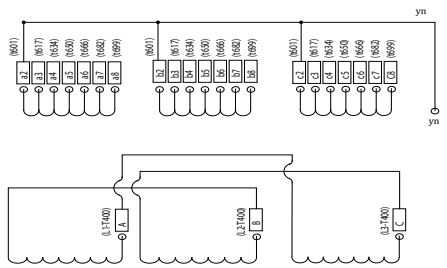

Data Specification

Three Phase 400/650V

Delta/Delta Vector Group

Rating		10KVA	20KVA	25KVA	30KVA	35KVA
IP32 Part Number		**T3699**	**T3700**	**T3701**	**T3702**	**T3719**
IP56 Part Number		**-**	**T3700-SPIP56**	**T3701-SPIP56**	**T3702-SPIP56**	**T3719-SPIP56**
IP32 PAD's Number		**0054/215084**	**0054/215085**	**0054/215086**	**0054/215087**	**0054/215088**
Equipment Classification	Primary Winding Classification	Class I	Class I	Class I	Class I	Class I
	Secondary Winding Classification	Class I	Class I	Class I	Class I	Class I
	Winding Conductor	Aluminium	Aluminium	Aluminium	Aluminium	Aluminium
Input	Primary rated voltage (V)	400V	400V	400V	400V	400V
	Primary taps	-	-	-	-	-
	Recommended protection	30A Type C or D	60A Type C or D	75A Type C or D	90A Type C or D	110A Type C or D
	% Efficiency	>97%	>97%	>97%	>97%	>97%
	Inrush (x times rated current)	<10 x Flc	5 x Flc	5x Flc	<10 x Flc	<10 x Flc
	% Impedance	< 5%	< 5%	< 5%	< 5%	< 5%
	X/R ratio	-	0.88	1.33	-	-
Output	Secondary rated voltage (V)	650	650	650	650	650
	Secondary taps	+/- 2.5, 5, 7.5%	+/- 2.5,5, 7.5%	+/- 2.5,5, 7.5%	+/- 2.5,5, 7.5%	+/- 2.5,5, 7.5%
	Prospective fault current (A)	-	456	537	-	-
	Duration of prospective fault current	>4 Seconds	>4 Seconds	>4 Seconds	>4 Seconds	>4 Seconds
	% Regulation	<3%	<3%	<3%	<3%	<3%
	Insulation Resistance (Ω)	Primary to Core *>100M Ω* Secondary to Core *>100M Ω* Primary to Secondary *>100M Ω*				
IP32 Weight (kg)		180	280	295	310	330
IP54 Weight (kg)		-	370	400	440	440

Vector Diagram	Wiring Diagram
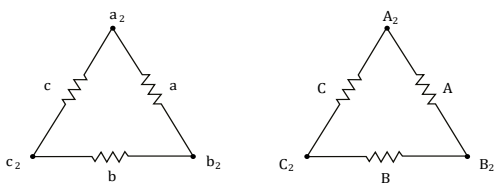	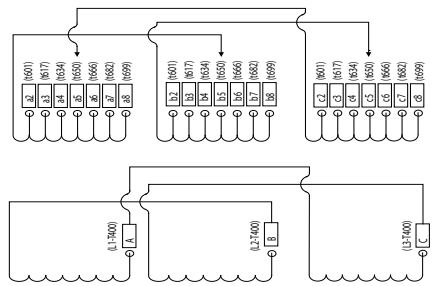

Data Specification

Three Phase 400/650V

Delta/Delta Vector Group

	Rating	40KVA	50KVA	60KVA	80KVA	100KVA	120KVA
	IP32 Part Number	**T3703**	**T3704**	**T3705**	**T3706**	**T3722**	**T3707**
	IP56 Part Number	**T3703-SPIP56**	**T3704-SPIP56**	**T3705-SPIP56**	**T3706-SPIP56**	**T3722-SPIP56**	**T3707-SPIP56**
	IP32 PAD's Number	**0054/215089**	**0054/215090**	**0054/215091**	**0054/215092**	**0054/215109**	**0054/215093**
Equipment Classification	Primary Winding Classification	Class I	Class I	Class I	Class I	Class I	Class I
	Secondary Winding Classification	Class I	Class I	Class I	Class I	Class I	Class I
	Winding Conductor	Aluminium	Aluminium	Aluminium	Aluminium	Aluminium	Aluminium
Input	Primary rated voltage (V)	400V	400V	400V	400V	400V	400V
	Primary taps	-	-	-	-	-	-
	Recommended protection	80A Type C or D	100A Type C or D	125A Type C or D	160A Type C or D	200A Type C or D	250A Type C or D
	% Efficiency	>97%	>97%	>97%	>97%	>97%	>97%
	Inrush (x times rated current)	<10 x Flc	<10 x Flc	9 x Flc	8.8 x Flc	8 x Flc	8.8 x Flc
	% Impedance	< 5%	< 5%	< 5%	< 5%	< 5%	< 5%
	X/R ratio	-	-	1.48	2.26	-	3.0
Output	Secondary rated voltage (V)	650	650	650	650	650	650
	Secondary taps	+/- 2.5,5, 7.5%	+/- 2.5,5, 7.5%	+/- 2.5,5, 7.5%	+/- 2.5,5, 7.5%	+/- 2.5,5, 7.5%	+/- 2.5,5, 7.5%
	Prospective fault current (A)	-	-	1325	2236	1449	3378
	Duration of prospective fault current	>4 Seconds	>4 Seconds	>4 Seconds	>4 Seconds	>4 Seconds	>4 Seconds
	% Regulation	<3%	<3%	<3%	<3%	<3%	<3%
	Insulation Resistance (Ω)	Primary to Core *>100M Ω* Secondary to Core *>100M Ω* Primary to Secondary *>100M Ω*					
IP32 Weight (kg)		340	450	500	690	780	805
IP54 Weight (kg)		537	617	677	757	889	980

Vector Diagram	Wiring Diagram
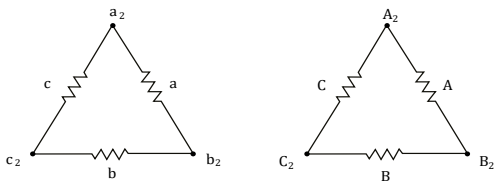	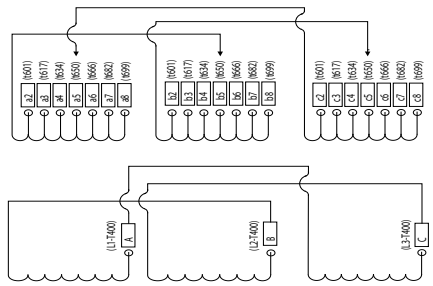

Data Specification

Three Phase 400/650V

Star/Delta Vector Group

Rating		10KVA	20KVA	25KVA	30KVA	35KVA
IP32 Part Number		**T3709**	**T3710**	**T3711**	**T3712**	**T3720**
IP56 Part Number		**-**	**T3710-SPIP56**	**T3711-SPIP56**	**T3712-SPIP56**	**T3720-SPIP56**
IP32 PAD's Number		**0054/215094**	**0054/215095**	**0054/215096**	**0054/215097**	**0054/215098**
Equipment Classification	Primary Winding Classification	Class I	Class I	Class I	Class I	Class I
	Secondary Winding Classification	Class I	Class I	Class I	Class I	Class I
	Winding Conductor	Aluminium	Aluminium	Aluminium	Aluminium	Aluminium
Input	Primary rated voltage (V)	400V	400V	400V	400V	400V
	Primary taps	-	-	-	-	-
	Recommended protection	20A Type C or D	40A Type C or D	50A Type C or D	60A Type C or D	75A Type C or D
	% Efficiency	>97%	>97%	>97%	>97%	>97%
	Inrush (x times rated current)	<10 x Flc	<10 x Flc	<10 x Flc	<10 x Flc	<10 x Flc
	% Impedance	< 5%	< 5%	< 5%	< 5%	< 5%
	X/R ratio	-	-	-	-	-
Output	Secondary rated voltage (V)	650	650	650	650	650
	Secondary taps	+/- 2.5, 5, 7.5%	+/- 2.5,5, 7.5%	+/- 2.5,5, 7.5%	+/- 2.5,5, 7.5%	+/- 2.5,5, 7.5%
	Prospective fault current (A)	-	-	-	-	-
	Duration of prospective fault current	>4 Seconds	>4 Seconds	>4 Seconds	>4 Seconds	>4 Seconds
	% Regulation	<3%	<3%	<3%	<3%	<3%
	Insulation Resistance (Ω)	Primary to Core *>100M Ω* Secondary to Core *>100M Ω* Primary to Secondary *>100M Ω*				
IP32 Weight (kg)		180	280	295	310	330
IP56 Weight (kg)		-	370	400	440	440

Vector Diagram

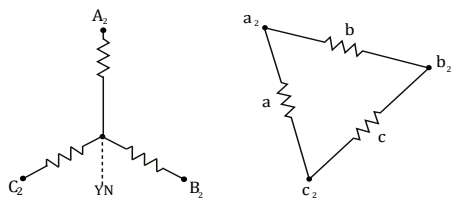

Wiring Diagram

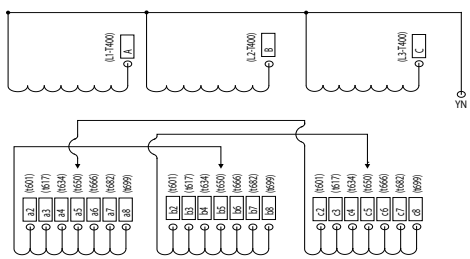

Data Specification

Three Phase 400/650V

Star/Delta Vector Group

Rating		40KVA	50KVA	60KVA	80KVA	100KVA	120KVA
IP32 Part Number		T3713	T3714	T3715	T3716	T3650	T3717
IP56 Part Number		T3713-SPIP56	T3714-SPIP56	T3715-SPIP56	T3716-SPIP56	T3650-SPIP56	T3717-SPIP56
IP32 PAD's Number		0054/215099	0054/215100	0054/215101	0054/215102	0054/215110	0054/215103
Equipment Classification	Primary Winding Classification	Class I	Class I	Class I	Class I	Class I	Class I
	Secondary Winding Classification	Class I	Class I	Class I	Class I	Class I	Class I
	Winding Conductor	Aluminium	Aluminium	Aluminium	Aluminium	Aluminium	Aluminium
Input	Primary rated voltage (V)	400V	400V	400V	400V	400V	400V
	Primary taps	-	-	-	-	-	-
	Recommended protection	80A Type C or D	100A Type C or D	125A Type C or D	125A Type C or D	160A Type C or D	250A Type C or D
	% Efficiency	>97%	>97%	>97%	>97%	>97%	>97%
	Inrush (x times rated current)	<10 x Flc	<10 x Flc	<10 x Flc	<10 x Flc	8 x Flc	<10 x Flc
	% Impedance	< 5%	< 5%	< 5%	< 5%	< 5%	< 5%
	X/R ratio	-	-	-	-	-	-
Output	Secondary rated voltage (V)	650	650	650	650	650	650
	Secondary taps	+/- 2.5,5, 7.5%	+/- 2.5,5, 7.5%	+/- 2.5,5, 7.5%	+/- 2.5,5, 7.5%	+/- 2.5,5, 7.5%	+/- 2.5,5, 7.5%
	Prospective fault current (A)	-	-	-	-	1324	-
	Duration of prospective fault current	>4 Seconds	>4 Seconds	>4 Seconds	>4 Seconds	>4 Seconds	>4 Seconds
	% Regulation	<3%	<3%	<3%	<3%	<3%	<3%
	Insulation Resistance (Ω)	Primary to Core *>100M Ω* Secondary to Core *>100M Ω* Primary to Secondary *>100M Ω*					
IP32 Weight (kg)		340	450	500	690	780	805
IP56 Weight (kg)		537	617	677	757	889	980

Vector Diagram	Wiring Diagram
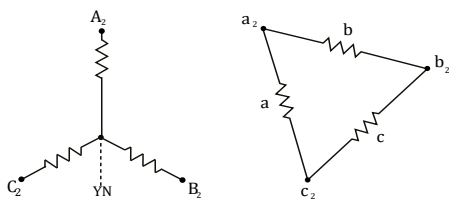	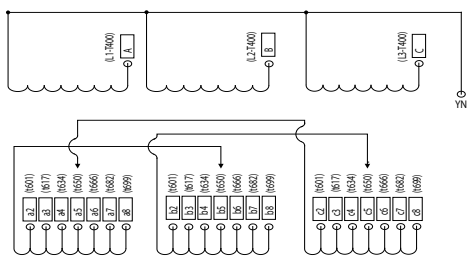

Principal Supply Point (PSP) Transformers

General Arrangements
IP32 Three Phase

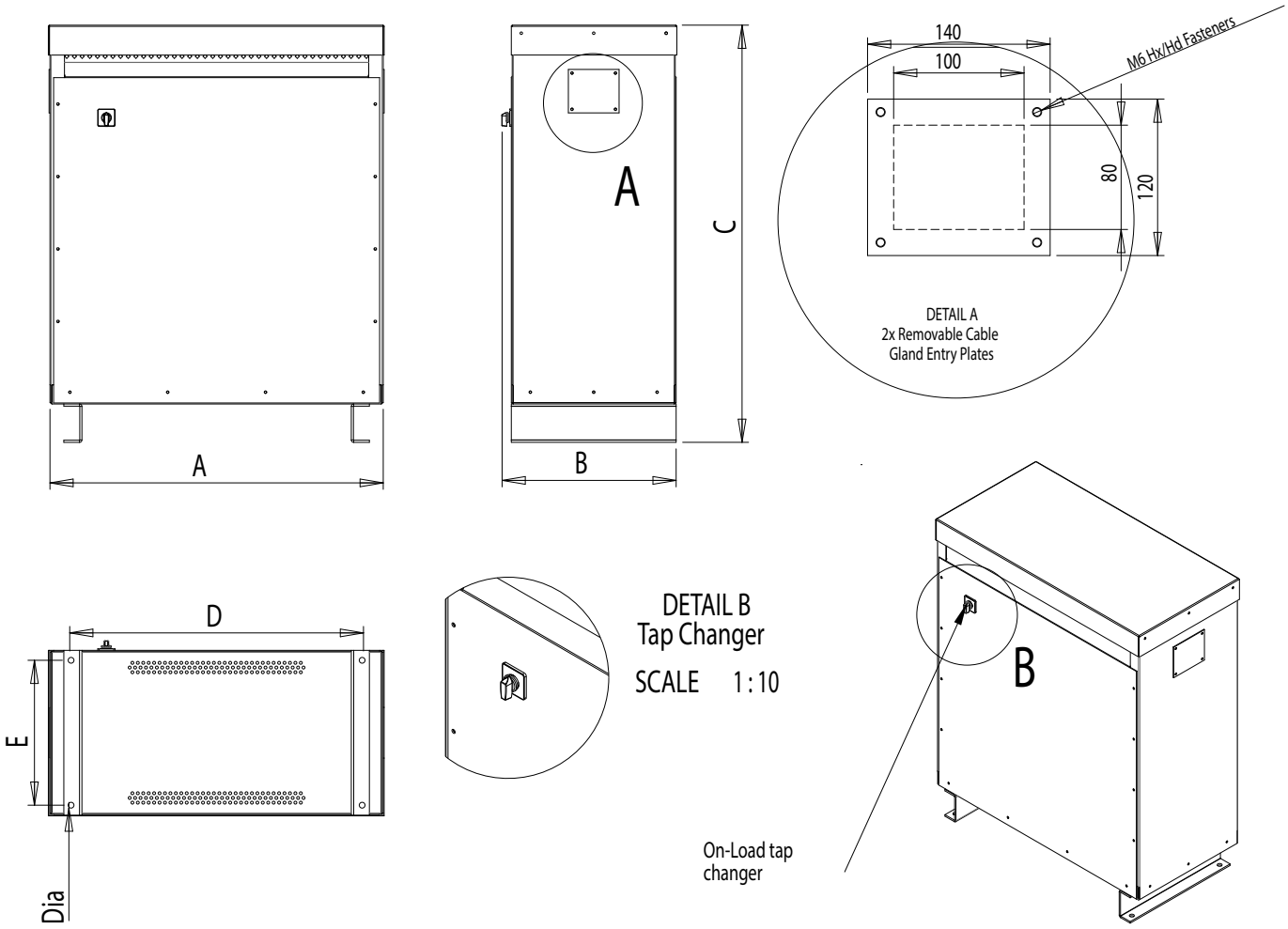

Three Phase						
Model	Dimension (mm)					
	A	B	C	D	E	Dia
10KVA	625	450	615	400	450	16
20KVA	760	550	1100	465	400	16
25KVA	760	550	1100	465	400	16
30KVA	760	550	1100	465	400	16
35KVA	760	550	1100	465	400	16
40KVA	920	600	1200	675	400	16
50KVA	920	600	1200	810	455	16
60KVA	920	600	1200	810	455	16
80KVA	920	600	1200	810	455	16
100KVA	920	600	1200	810	455	16
120KVA	920	600	1200	810	455	16

*** Termination by way of DIN Screw Clamp or Stud terminals.**
All terminals located above the transformer, accessible by removal of enclosure lid.

Ensure that all screws are replaced when securing the transformer lid and that all terminations have been made correctly. Cables should enter via the removable gland plates either side of the enclosure body. Gland plates should be drilled away from the transformer aligned to the required incoming cable conduit.

General Arrangements
IP56 Three Phase

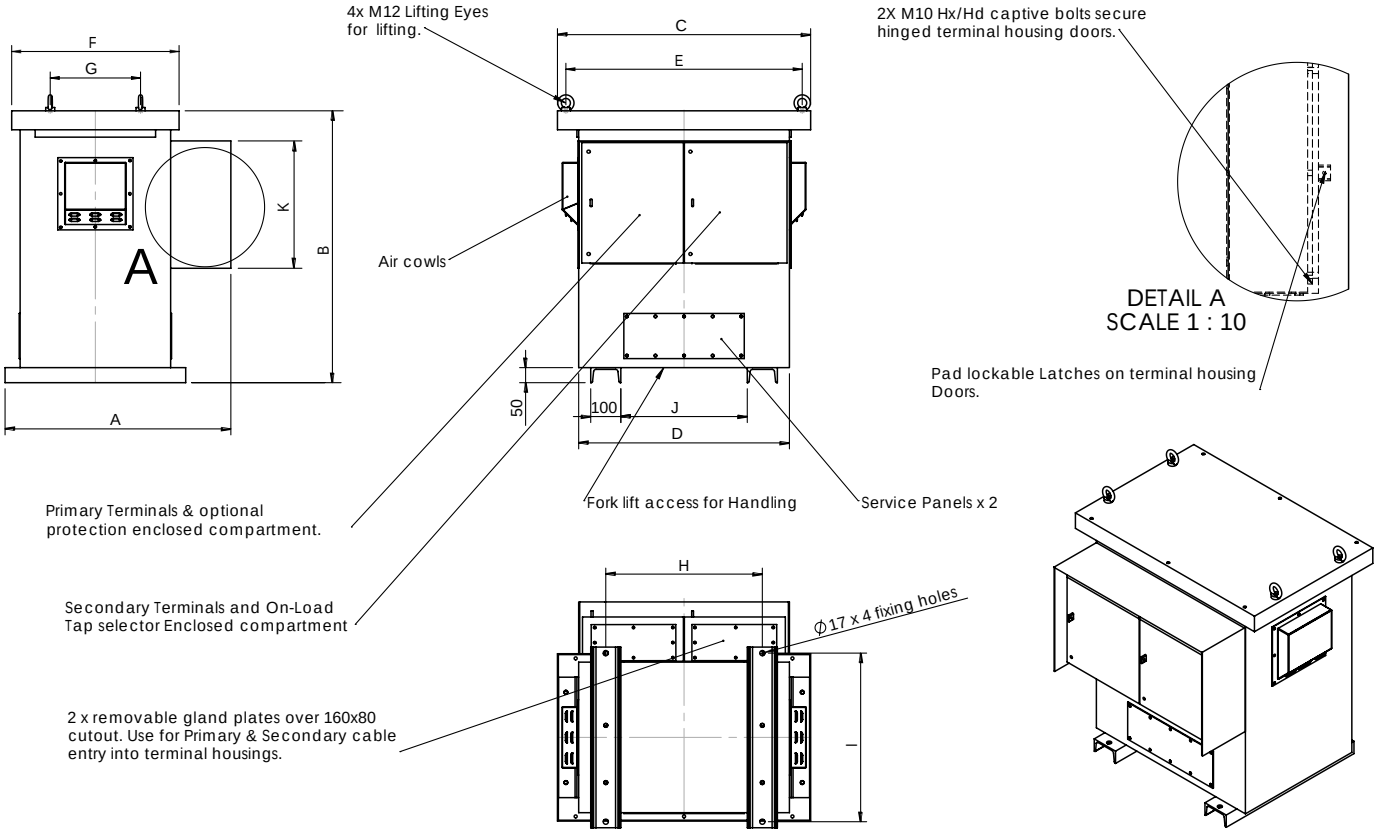

Note: GA applies to all Voltage Variants on Primary and Secondary

Note: Minimum Size for 3ph IP56 is 20KVA

Single Phase (Bi Phase)											
Model	Dimension (mm)										
	A	B	C	D	E	F	G	H	I	J	K
20KVA	875	1100	997	850	940	700	350	560	740	460	600
25KVA	875	1100	997	850	940	700	350	560	740	460	600
30KVA	875	1100	997	850	940	700	350	560	740	460	600
35KVA	875	1100	997	850	940	700	350	560	740	460	600
40KVA	1075	1200	1097	1050	1040	800	440	680	890	530	600
50KVA	1075	1200	1097	1050	1040	800	440	800	890	650	600
60KVA	1105	1200	1097	1050	1040	800	440	800	890	650	600
80KVA	1105	1200	1097	1050	1040	800	440	800	890	650	600
100KVA	1255	1255	1391	1250	1335	800	440	920	890	770	670
120KVA	1255	1255	1391	1250	1335	800	440	920	890	770	670

Note: Specifying ATL Transformers in a project? 3D Models and 2D drawings available on request ready to be placed in to your drawing or 3D assembly.

*** Termination by way of DIN Screw Clamp or Stud terminals.**
All terminals located above the transformer, accessible by removal of enclosure lid.

Ensure that all screws are replaced when securing the transformer lid and that all terminations have been made correctly. Cables should enter via the removable gland plates either side of the enclosure body. Gland plates should be drilled away from the transformer aligned to the required incoming cable conduit.

Certificate of Acceptance PA05/07022

Manufacturer:
ATL Transformers Ltd

Issue : 5
Valid From : 13/09/2023
Review Date : 30/04/2026

ATL Indoor PSP/ASP Power Transformers

Product Description

Range of high efficiency, Aluminium wound, Class I signalling power transformers.

For use in signalling power, PSP/ASP applications.

Transformer range comprises:

5 to 80kVA single phase (BI-Phase) including voltage variants:

- 400/650V AC
- 230/650V AC
- 650/650V AC
- 400/230V AC
- 650/230V AC

5 to 120kVA three phase, 400/650V AC variants with the following vector groups:

- Delta/Star
- Delta/Delta
- Star/Delta

Product Image

Scope of Acceptance

Full Acceptance

Range of Class I, IP32 indoor rated signalling power transformers. The range includes both single phase (BI-Phase) and three phase variants manufactured in accordance with IEC 60076 enhanced with relevant clauses from BR924A and NR/L2/SIGELP/30007.

Designed for operation in ambient environments -20ºC to +60ºC for use in buildings (indoors) only.

Network Rail Acceptance Panel (NRAP) hereby authorises the product above for use and trial use on railway infrastructure for which Network Rail is the Infrastructure Manager under the ROGS regulations.

Authorised by:

Aamir Malik
Product Acceptance Coordinator

Reviewed by:

Felix Langley
Network Technical Head of Power Distribution HV/LV

Please contact prodacc@networkrail.co.uk

Network Rail Infrastructure Ltd Registered Office Waterloo General Offices, London SE1 8SW. Registered in England and Wales No. 2904587 www.networkrail.co.uk
Version 8.0 April 2023.

Certificate of Acceptance PA05/07022

Manufacturer:
ATL Transformers Ltd

Issue : 5
Valid From : 13/09/2023
Review Date : 30/04/2026

Specific Conditions

The following Conditions are specific to the approved product/s contained within this Certificate. These conditions must be adhered to in addition to the Network Rail General Conditions contained within the "General Terms and Conditions" section.
Failure to adhere to these conditions may result in the withdrawal or suspension of Acceptance of some, or all of the items contained within the accepted configuration.

Manufacturer

1)	As per the scope of acceptance of this certificate.
2)	O&M Manuals to be provided with each installation.
3)	Manufactured in accordance with IEC 60076 and enhanced with clauses BR924A and NR/L2/SIGELP/30007.
4)	Transformer assemblies detailed on this certificate shall be tested in accordance with Factory Test Specification Doc Ref: QF51.
5)	Test records will be retained for auditing purposes.
6)	The manufacturer will retain Certificates of Conformity to EN AW-1370(AA1370 equivalent) of all aluminium winding wire used in the construction of transformer detailed within this certificate.

User

1)	As per the scope of acceptance of this certificate.
2)	The equipment shall be installed and operated in accordance with the manufacturer's documentation.
3)	No spare parts shall be offered for any product detailed within this certificate.
4)	Only for use within buildings, equipment operating environment -20ºC to +60ºC.

Product Configuration

System or Complete Assembly

Part No.	Description	Catalogue No.
T2987	5kVA single phase 400/650V Signalling Power Transformer	0054/215008
T2909	10kVA single phase 400/650V Signalling Power Transformer	0054/215009
T3077	15kVA single phase 400/650V Signalling Power Transformer	0054/215010
T2910	20kVA single phase 400/650V Signalling Power Transformer	0054/215011
T3078	25kVA single phase 400/650V Signalling Power Transformer	0054/215012
T2911	30kVA single phase 400/650V Signalling Power Transformer	0054/215013
T3079	35kVA single phase 400/650V Signalling Power Transformer	0054/215014
T2912	40kVA single phase 400/650V Signalling Power Transformer	0054/215015
T3103	50kVA single phase 400/650V Signalling Power Transformer	0054/215016
T2913	60kVA single phase 400/650V Signalling Power Transformer	0054/215017
T3320	80kVA single phase 400/650V Signalling Power Transformer	0054/215018
T2987-1	5kVA single phase 230/650V Signalling Power Transformer	0054/215019
T2909-1	10kVA single phase 230/650V Signalling Power Transformer	0054/215020
T3077-1	15kVA single phase 230/650V Signalling Power Transformer	0054/215021
T2910-1	20kVA single phase 230/650V Signalling Power Transformer	0054/215022
T3078-1	25kVA single phase 230/650V Signalling Power Transformer	0054/215023
T2911-1	30kVA single phase 230/650V Signalling Power Transformer	0054/215024
T3079-1	35kVA single phase 230/650V Signalling Power Transformer	0054/215025
T2912-1	40kVA single phase 230/650V Signalling Power Transformer	0054/215026
T3103-1	50kVA Single phase 230/650V Signalling Power Transformer	0054/215027

Network Rail Accepted
Product: PA05/06592

DATASHEET BROCHURE
DITA Transformers

- Class II DITA transformers with single or dual output windings up to 40kVA

The DITA (Distribution Interface Transformer Assembly) is an unprecedented New generation of full Class II power transformers. The range is available in different model sizes from 5kVA-40KVA and all are aluminium wound making the range lightweight and cost effective in comparison to those which are copper.

Class II
DITA

ATL Transformers, the leading manufacturer of innovative transformer solutions on the railways have launched a Distribution Interface transformer range for the new DITA schemes. This range is an unprecedented New generation of full Class II power transformers that exceed the minimum requirements of Network Rail specifications with game changing benefits. Utilizing ATL's on board eco-rail® technology which is fast becoming the preferred solution on the railways this pioneering DITA range of transformers deliver the lightest, most compact and environmentally friendly solution available to the market today. This range have been developed with Network Rail and deployed to support DITA and other key strategic improvement schemes such as Copper Elimination, Inrush reduction and sustainability charter targets to reduce carbon emissions throughout the network.

KEY FEATURES

•ATL's DITA range offer seamless integration and tested/ proven thermal rise compatibility with NWR standard apparatus housings and associated equipment.

•The ability to reset or Boost various distribution voltages.

• Galvanic Isolation and capacitance decoupling of feeder circuits.

•Facilitate Class I legacy to Class II feeder integration.

• Inrush characteristics across the whole range of less than 5 times Full load system current.

• A stable of single and dual output multi voltage configurations for multi-regional UK distribution voltages.

• ATL's Lightweight aluminium windings and connection technology eradicate the use of expensive and fast exhausting copper reserves to support sustainability.

• Unmatched efficiency delivering enhanced asset life in excess of 400,000 hrs continuous operation.

• The safest transformer solution available for Class II schemes.

Single Output

Dual Output

Fully Class II

Full Class II designation prevents the need for expensive earthing surveys and bonding where adopted.

Lightweight Aluminium

ATL's DITA range all use lightweight aluminum windings and connection technology. making it more cost effective than traditional copper windings.

DITA Transformers

Principle System Aplications

Image courtsey of ILECSYS Rail

- Segregation between Class I & Class II installation to preserve integrity of a Class II based feeder when interfaced with a Class I feeder.
- Segregation between feeders and spurs or branches to divide a signalling power system feeder into sections, particularly long feeders or those having multiple spurs or branches
- To step up or reset system voltages.
- First fault current reduction
- To minimise the flow of stray traction cur rent between different railway traction system designs

Data Specification
Single Output 650/650V

Model		5KVA	10KVA	15KVA	20KVA	30KVA	40KVA
Part Reference		T3258	T3259	T3260	T3257	T3278	T3275
PAD's Number		0086/011903	0086/011905	0086/011906	-	-	0086/011907
Equipment Classification	Primary Winding Classification	Class II	Class II	Class II	Class II	Class II	Class II
	Secondary Winding Classification	Class II	Class II	Class II	Class II	Class II	Class II
	Winding conductor	Aluminium	Aluminium	Aluminium	Aluminium	Aluminium	Aluminium
Input	Primary rated voltage (VAC)	650	650	650	650	650	650
	Primary taps (VAC)	65-0-585-617-**650**	65-0-585-617-**650**	65-0-585-617-**650**	65-0-585-617-**650**	65-0-585-617-**650**	65-0-585-617-**650**
	Recommended Primary protection	16A BS88 & IEC 60269-1&2	25A BS88 & IEC 60269-1&2	32A BS88 & IEC 60269-1&2	45A BS88 & IEC 60269-1&2	63A BS88 & IEC 60269-1&2	100A BS88 & IEC 60269-1&2
	% efficiency	>97	>97	>97	>97	>97	>97
	Inrush (x times rated current)	< 5	< 5	< 5	< 5	< 5	< 5
	I^2t (Transformer)	< 14.79	< 59.17	< 133	< 236	< 532	< 946
	% impedance	< 5	< 5	< 5	< 5	< 5	< 5
	X/R ratio	1.14	0.64	1.05	1.1	1.66	1.52
Output	Secondary rated voltage (VAC)	650	650	650	650	650	650
	Secondary taps (VAC)	13-0-13-**650**-676	13-0-13-**650**-676	13-0-13-**650**-676	13-0-13-**650**-676	13-0-13-**650**-676	13-0-13-**650**-676
	Rating	5KVA	10KVA	15KVA	20KVA	30KVA	40KVA
	Prospective fault current (A)	581	532	771	1141	1809	3270
	Duration of prospective fault current (secs)	> 2	> 2	> 2	> 2	> 2	> 2
	% Regulation	< 3	< 3	< 3	< 3	< 3	< 3
	Insulation Resiatance (Ω)	Primary to Core *>100M Ω* Secondary to Core *>100M Ω* Primary to Secondary *>100M Ω*	Primary to Core *>100M Ω* Secondary to Core *>100M Ω* Primary to Secondary *>100M Ω*	Primary to Core *>100M Ω* Secondary to Core *>100M Ω* Primary to Secondary *>100M Ω*	Primary to Core *>100M Ω* Secondary to Core *>100M Ω* Primary to Secondary *>100M Ω*	Primary to Core *>100M Ω* Secondary to Core *>100M Ω* Primary to Secondary *>100M Ω*	Primary to Core *>100M Ω* Secondary to Core *>100M Ω* Primary to Secondary *>100M Ω*
Weight (kg)		93	150	195	253	308	370

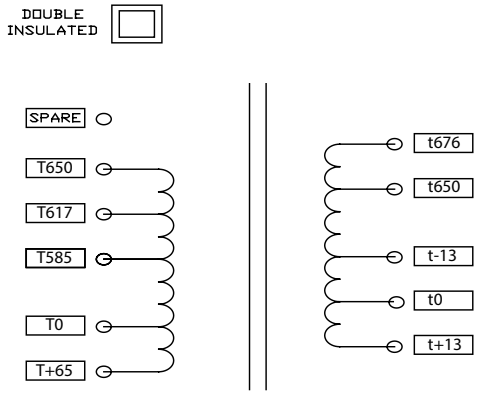

Wiring Diagram

Details for Other
Voltage Variants

- **650V/650V Dual Output Available**
  5KVA, 10KVA, 15KVA, 20KVA, 30KVA & 40KVA
- **230V/230V Single Output Available**
  5KVA, 10KVA, 15KVA, 20KVA, 30KVA & 40KVA
- **230V/230V Dual Output Available**
  5KVA, 10KVA, 15KVA, 20KVA, 30KVA & 40KVA
- **400V/400V Single Output Available**
  5KVA, 10KVA, 15KVA, 20KVA, 30KVA & 40KVA
- **400V/400V Dual Output Available**
  5KVA, 10KVA, 15KVA, 20KVA, 30KVA & 40KVA

General Arrangements
5-40KVA DITA

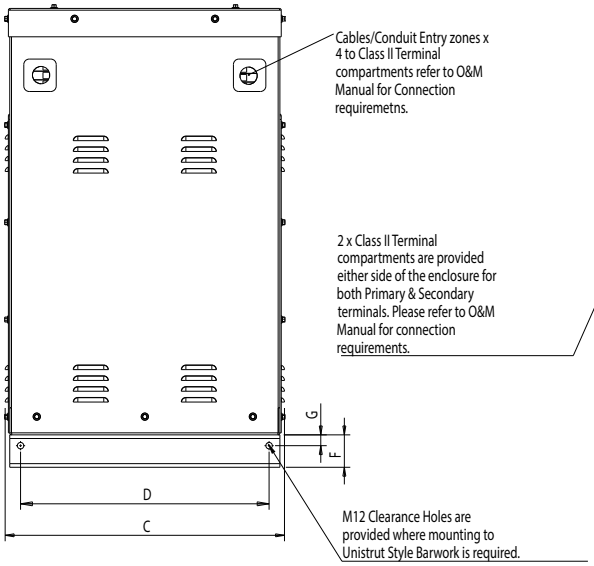

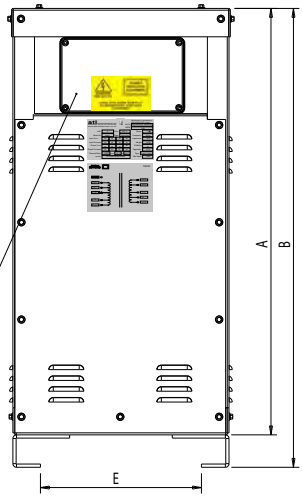

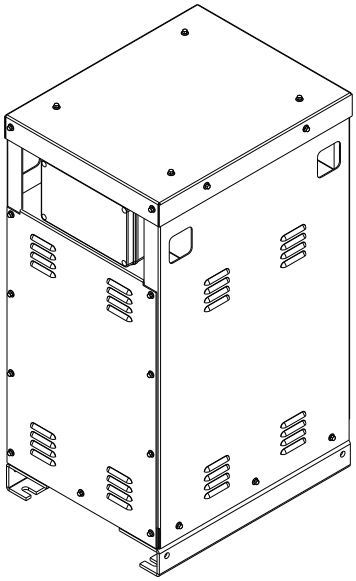

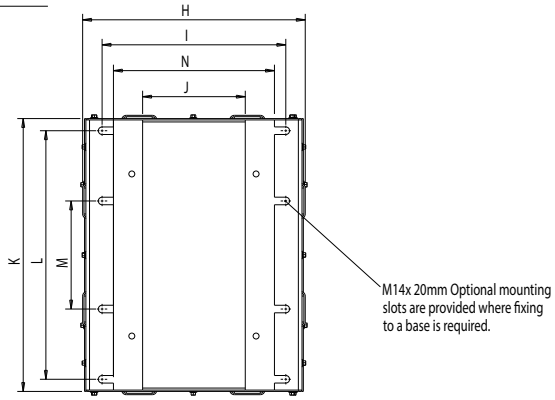

Model	Dimension (mm)													
	A	B	C	D	E	F	G	H	I	J	K	L	M	N
5KVA	479	539	519	460	298	60	20	412	354	160	505	460	200	298
10KVA	689	749	519	460	298	60	20	412	340	190	505	460	200	298
15KVA	789	849	519	460	298	60	20	412	340	190	505	460	200	298
20KVA	789	849	519	460	298	60	20	412	340	190	505	460	200	298
30KVA	994	1055	519	460	594	60	20	712	636	307	505	460	200	594
40KVA														

NetworkRail

Certificate of Acceptance PA05/06592

Manufacturer:
ATL Transformers Ltd

Issue : 2
Valid From : 10-05-2019

Distribution Interface Transformer

Product Description

Distribution Interface Transformer, DIT, for use with DITA for segregation of existing signalling power distribution feeder circuits. Ratings of 5kVA, 10kVA, 15kVA and 40kVA inclusive.

Product Image

Scope of Acceptance - Full Acceptance

Distribution Interface Transformer, DIT, for use with DITA for segregation of existing signalling power distribution feeder circuits.

Network Rail Acceptance Panel (NRAP) hereby authorises the product above for use and trial use on railway infrastructure for which Network Rail is the Infrastructure Manager under the ROGS regulations.

Reviewed by:

Sam Flint
Product Acceptance Coordinator

Authorised by:

Felix Langley
Professional Head of Power Distribution HV/LV

Network Rail Accepted
Product: PA05/06353

DATASHEET BROCHURE
Auxiliary Transformers

- IP67 family of non critical Full Class II isolating transformers for auxiliary circuits

IP67 family of non critical Full Class II isolating transformers for auxiliary circuits. these units are for use within Class II Switchgear Assemblies to Supply Class II Anti Condensation Heaters and lighting.

WARNING 650V AC
DOUBLE INSULATED
ENCLOSURE INSIDE
DOUBLE
INSULATED
EQUIPMENT

Auxiliary Circuit Transformers

The non critical auxiliary circuit transformers are a range of Full Class II isolating transformers which range from 50VA-250VA. These type of transformers are ideal for use within Class II switchgear assemblies to supply Class II Anti Condensation Heaters, Circuit Breaker Air Compressors, Load Tap Changers, lighting and receptacles. This waterproof transformer contains primary and secondary terminals located within the enclosure with segregating guards making it Fully Class II and simple to identify the primary and secondary housings. The housing comes with two glands for simple installation with Network Approved conduit cable.

Primary & Secondary
Terminals located inside the double insulated enclosure. Segregating guards are provided between primary & secondary terminations

M25 Holes
2 x M25 holes provided for suitable conduit coupling

IP66/IP67 Enclosure
Waterproof

KEY FEATURES

- Efficiency rate of 89.3%-94.29%
- Ultra-Low Inrush Current
- A Waterproof IP66/IP67 Enclosure which makes it suitable for wet environments.
- IK 08 rating, taking impacts of up to 5 joules.
- Easy access to primary and secondary terminals via cable glands and removal of lid.
- Adjustable mounting feet which gives more option when installing.

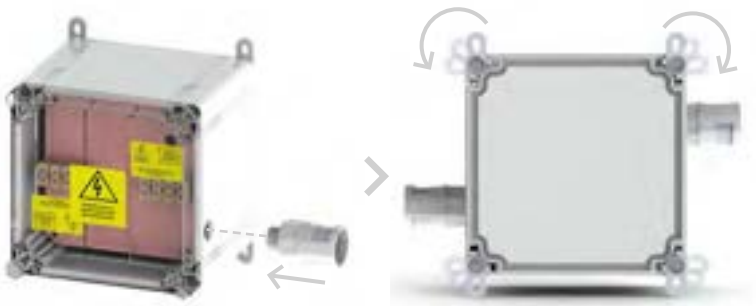

Simple to Install
Adjustable mounting feet on the back of enclosure gives more clearance when fitting.

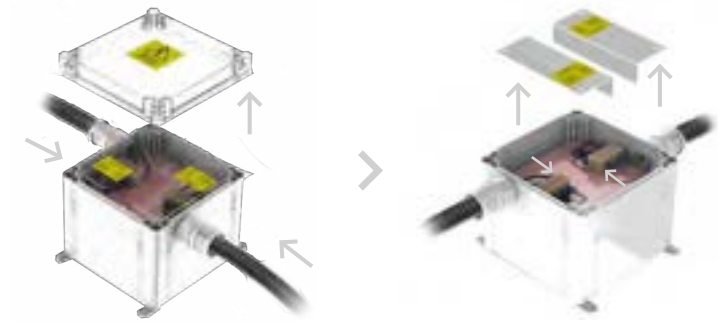

Easy input connections
Using the 2 M25 holes a conduit cable can be inputted directly in to the enclosure and customer input terminals.

Auxiliary Transformers
Full Class II

The Auxiliary Transformer is available in wide range of different VA ratings, these include:

- 50VA
- 100VA
- 150VA
- 250VA

Data Specification
650/110V 50-250VA

Model		50VA	100VA	150VA	250VA
Part Reference		**T3047**	**T3045**	**T3046**	**T3044**
PAD's Number		**054/044062**	**054/044063**	**054/044064**	**054/044065**
Equipment Classification	Primary Winding Classification	Class II	Class II	Class II	Class II
	Secondary Winding Classification	Class II	Class II	Class II	Class II
	Winding conductor	Copper	Copper	Copper	Copper
Input	Primary rated voltage (V)	650	650	650	650
	Primary taps	617 – **650** – 682	617 – **650** – 682	617 – **650** – 682	617 – **650** – 682
	Recommended fuse protection	1A BS88 & 10x38 gG IEC 60269-1&2	1A BS88 & 10x38 gG IEC 60269-1&2	1A BS88 & 10x38 gG IEC 60269-1&2	1A BS88 & 10x38 gG IEC 60269-1&2
	% efficiency	>91%	>90%	>91%	>94%
	Inrush (x times rated current)	<7	<4	<7	<8
	I^2t	0.03	0.13	0.08	0.5
	% impedance	6.5%	9%	8%	6%
	X/R ratio	0.54	0.93	0.70	0.84
Output	Secondary rated voltage (V)	110	110	110	110
	Secondary taps	0–105–**110**–115	0–105–**110**–115	0–105–**110**–115	0–105–**110**–115
	Rating (VA)	50	100	150	250
	Prospective fault current (A)	7	10	18	37
	Duration of prospective fault current	>2 Sec	>2 Sec	>2 Sec	>2 Sec
	% Regulation	6	7	6	5
	Insulation Resistance (Ω) 500V	Primary to Core >100M Ω Secondary to Core >100M Ω Primary to Secondary >100M Ω	Primary to Core >100M Ω Secondary to Core >100M Ω Primary to Secondary >100M Ω	Primary to Core >100MΩ Secondary to Core >100M Ω Primary to Secondary >100M Ω	Primary to Core >100MΩ Secondary to Core >100M Ω Primary to Secondary >100M Ω
Weight (kg)		5.3	6.12	6.8	8.2

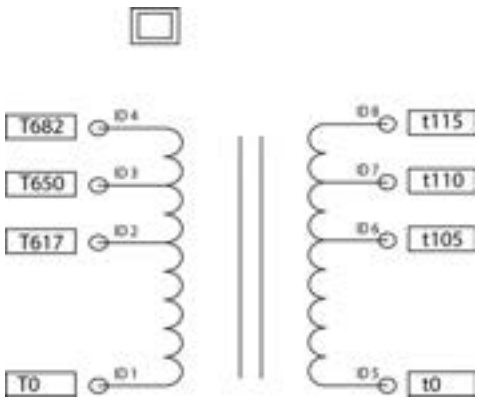

Wiring Diagram

Data Specification
230/110V 50-250VA

Model		50VA	100VA	150VA	250VA
Part Reference		**T3527**	**T3531**	**T3535**	**T3539**
PAD's Number		**0054/037215**	**0054/037216**	**0054/037217**	**0054/037218**
Equipment Classification	Primary Winding Classification	Class II	Class II	Class II	Class II
	Secondary Winding Classification	Class II	Class II	Class II	Class II
	Winding conductor	Copper	Copper	Copper	Copper
Input	Primary rated voltage (V)	230	230	230	230
	Primary taps	218 – **230** – 241	218 – **230** – 241	218 – **230** – 241	218 – **230** – 241
	Recommended fuse protection	1A BS88 & 10x38 gG IEC 60269-1&2	1A BS88 & 10x38 gG IEC 60269-1&2	1A BS88 & 10x38 gG IEC 60269-1&2	2A BS88 & 10x38 gG IEC 60269-1&2
	% efficiency	>91%	>90%	>91%	>94%
	Inrush (x times rated current)	<7	<4	<7	<8
	I^2t	0.03	0.13	0.08	0.5
	% impedance	6.5%	9%	8%	6%
	X/R ratio	0.54	0.93	0.70	0.84
Output	Secondary rated voltage (V)	110	110	110	110
	Secondary taps	0–105–**110**–115	0–105–**110**–115	0–105–**110**–115	0–105–**110**–115
	Rating (VA)	50	100	150	250
	Prospective fault current (A)	7	10	18	37
	Duration of prospective fault current	>2 Sec	>2 Sec	>2 Sec	>2 Sec
	% Regulation	6	7	6	5
	Insulation Resistance (Ω) 500V	Primary to Core >100M Ω Secondary to Core >100M Ω Primary to Secondary >100M Ω	Primary to Core >100M Ω Secondary to Core >100M Ω Primary to Secondary >100M Ω	Primary to Core >100MΩ Secondary to Core >100M Ω Primary to Secondary >100M Ω	Primary to Core >100MΩ Secondary to Core >100M Ω Primary to Secondary >100M Ω
Weight (kg)		5.3	6.12	6.8	8.2

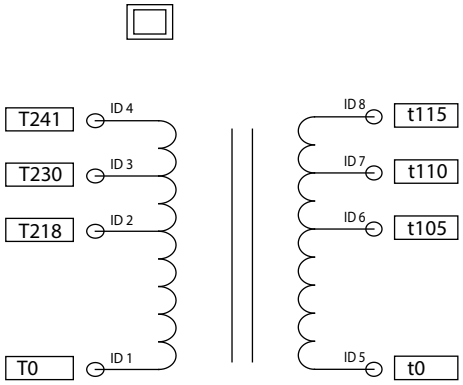

Wiring Diagram

Data Specification
400-415-440/110V 250-250VA

Model		50VA	100VA	150VA	250VA
Part Reference		**T3528**	**T3532**	**T3536**	**T3540**
PAD's Number		**0054/037211**	**0054/037212**	**0054/037213**	**0054/037214**
Equipment Classification	Primary Winding Classification	Class II	Class II	Class II	Class II
	Secondary Winding Classification	Class II	Class II	Class II	Class II
	Winding conductor	Copper	Copper	Copper	Copper
Input	Primary rated voltage (V)	400-415-440	400-415-440	400-415-440	400-415-440
	Primary taps	380-**400**-**415**-**440**-462	380-**400**-**415**-**440**-462	380-**400**-**415**-**440**-462	380-**400**-**415**-**440**-462
	Recommended fuse protection	1A BS88 & 10x38 gG IEC 60269-1&2	1A BS88 & 10x38 gG IEC 60269-1&2	1A BS88 & 10x38 gG IEC 60269-1&2	1A BS88 & 10x38 gG IEC 60269-1&2
	% efficiency	>91%	>90%	>91%	>94%
	Inrush (x times rated current)	<7	<4	<7	<8
	I^2t	0.03	0.13	0.08	0.5
	% impedance	6.5%	9%	8%	6%
	X/R ratio	0.54	0.93	0.70	0.84
Output	Secondary rated voltage (V)	110	110	110	110
	Secondary taps	0–105–**110**–115	0–105–**110**–115	0–105–**110**–115	0–105–**110**–115
	Rating (VA)	50	100	150	250
	Prospective fault current (A)	7	10	18	37
	Duration of prospective fault current	>2 Sec	>2sec	>2sec	>2sec
	% Regulation	6	7	6	5
	Insulation Resistance (Ω) 500V	Primary to Core >100M Ω Secondary to Core >100M Ω Primary to Secondary >100M Ω	Primary to Core >100M Ω Secondary to Core >100M Ω Primary to Secondary >100M Ω	Primary to Core >100MΩ Secondary to Core >100M Ω Primary to Secondary >100M Ω	Primary to Core >100MΩ Secondary to Core >100M Ω Primary to Secondary >100M Ω
Weight (kg)		5.3	6.12	6.8	8.2

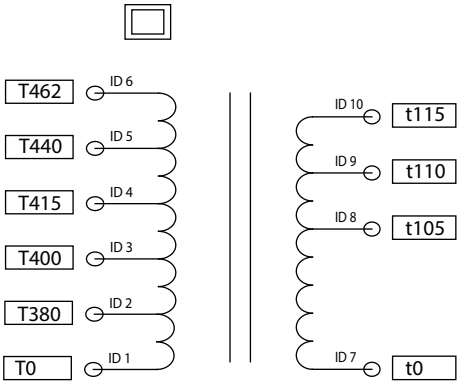

Wiring Diagram

Data Specification
650/230V 50-250VA

Model		50VA	100VA	150VA	250VA
Part Reference		**T3529**	**T3533**	**T3537**	**T3541**
PAD's Number		**0054/037207**	**0054/037208**	**0054/037209**	**0054/037210**
Equipment Classification	Primary Winding Classification	Class II	Class II	Class II	Class II
	Secondary Winding Classification	Class II	Class II	Class II	Class II
	Winding conductor	Copper	Copper	Copper	Copper
Input	Primary rated voltage (V)	650	650	650	650
	Primary taps	617 – **650** – 682	617 – **650** – 682	617 – **650** – 682	617 – **650** – 682
	Recommended fuse protection	1A BS88 & 10x38 gG IEC 60269-1&2	1A BS88 & 10x38 gG IEC 60269-1&2	1A BS88 & 10x38 gG IEC 60269-1&2	1A BS88 & 10x38 gG IEC 60269-1&2
	% efficiency	>91%	>90%	>91%	>94%
	Inrush (x times rated current)	<7	<4	<7	<8
	I^2t	0.03	0.13	0.08	0.5
	% impedance	6.5%	9%	8%	6%
	X/R ratio	0.54	0.93	0.70	0.84
Output	Secondary rated voltage (V)	230	230	230	230
	Secondary taps	0–218–**230**–241	0–218–**230**–241	0–218–**230**–241	0–218–**230**–241
	Rating (VA)	50	100	150	250
	Prospective fault current (A)	3	5	9	18
	Duration of prospective fault current	>2 Sec	>2sec	>2sec	>2sec
	% Regulation	6	7	6	5
	Insulation Resistance (Ω) 500V	Primary to Core >100M Ω Secondary to Core >100M Ω Primary to Secondary >100M Ω	Primary to Core >100M Ω Secondary to Core >100M Ω Primary to Secondary >100M Ω	Primary to Core >100MΩ Secondary to Core >100M Ω Primary to Secondary >100M Ω	Primary to Core >100MΩ Secondary to Core >100M Ω Primary to Secondary >100M Ω
Weight (kg)		5.3	6.12	6.8	8.2

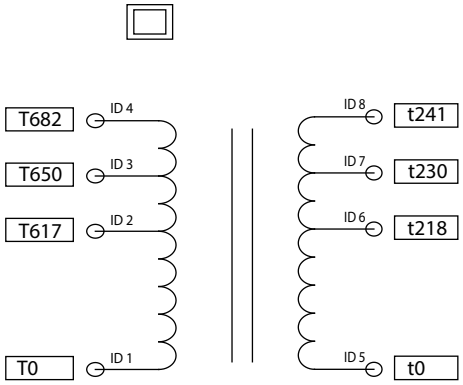

Wiring Diagram

Data Specification
230/230V 250-250VA

Model		50VA	100VA	150VA	250VA
Part Reference		**T3530**	**T3534**	**T3538**	**T3542**
PAD's Number		**0054/037219**	**0054/037220**	**0054/037221**	**0054/037222**
Equipment Classification	Primary Winding Classification	Class II	Class II	Class II	Class II
	Secondary Winding Classification	Class II	Class II	Class II	Class II
	Winding conductor	Copper	Copper	Copper	Copper
Input	Primary rated voltage (V)	230	230	230	230
	Primary taps	218 – **230** – 241	218 – **230** – 241	218 – **230** – 241	218 – **230** – 241
	Recommended fuse protection	1A BS88 & 10x38 gG IEC 60269-1&2	1A BS88 & 10x38 gG IEC 60269-1&2	1A BS88 & 10x38 gG IEC 60269-1&2	2A BS88 & 10x38 gG IEC 60269-1&2
	% efficiency	>91%	>90%	>91%	>94%
	Inrush (x times rated current)	<7	<4	<7	<8
	I^2t	0.03	0.13	0.08	0.5
	% impedance	6.5%	9%	8%	6%
	X/R ratio	0.54	0.93	0.70	0.84
Output	Secondary rated voltage (V)	230	230	230	230
	Secondary taps	218 – **230** – 241	218 – **230** – 241	218 – **230** – 241	218 – **230** – 241
	Rating (VA)	50	100	150	250
	Prospective fault current (A)	3	5	9	18
	Duration of prospective fault current	>2 Sec	>2sec	>2sec	>2sec
	% Regulation	6	7	6	5
	Insulation Resistance (Ω) 500V	Primary to Core >100M Ω Secondary to Core >100M Ω Primary to Secondary >100M Ω	Primary to Core >100M Ω Secondary to Core >100M Ω Primary to Secondary >100M Ω	Primary to Core >100MΩ Secondary to Core >100M Ω Primary to Secondary >100M Ω	Primary to Core >100MΩ Secondary to Core >100M Ω Primary to Secondary >100M Ω
Weight (kg)		5.3	6.12	6.8	8.2

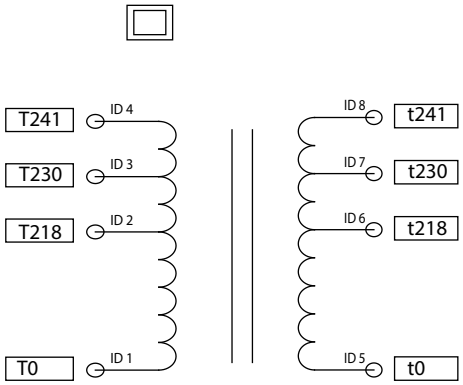

Wiring Diagram

General Arrangements
50-250VA

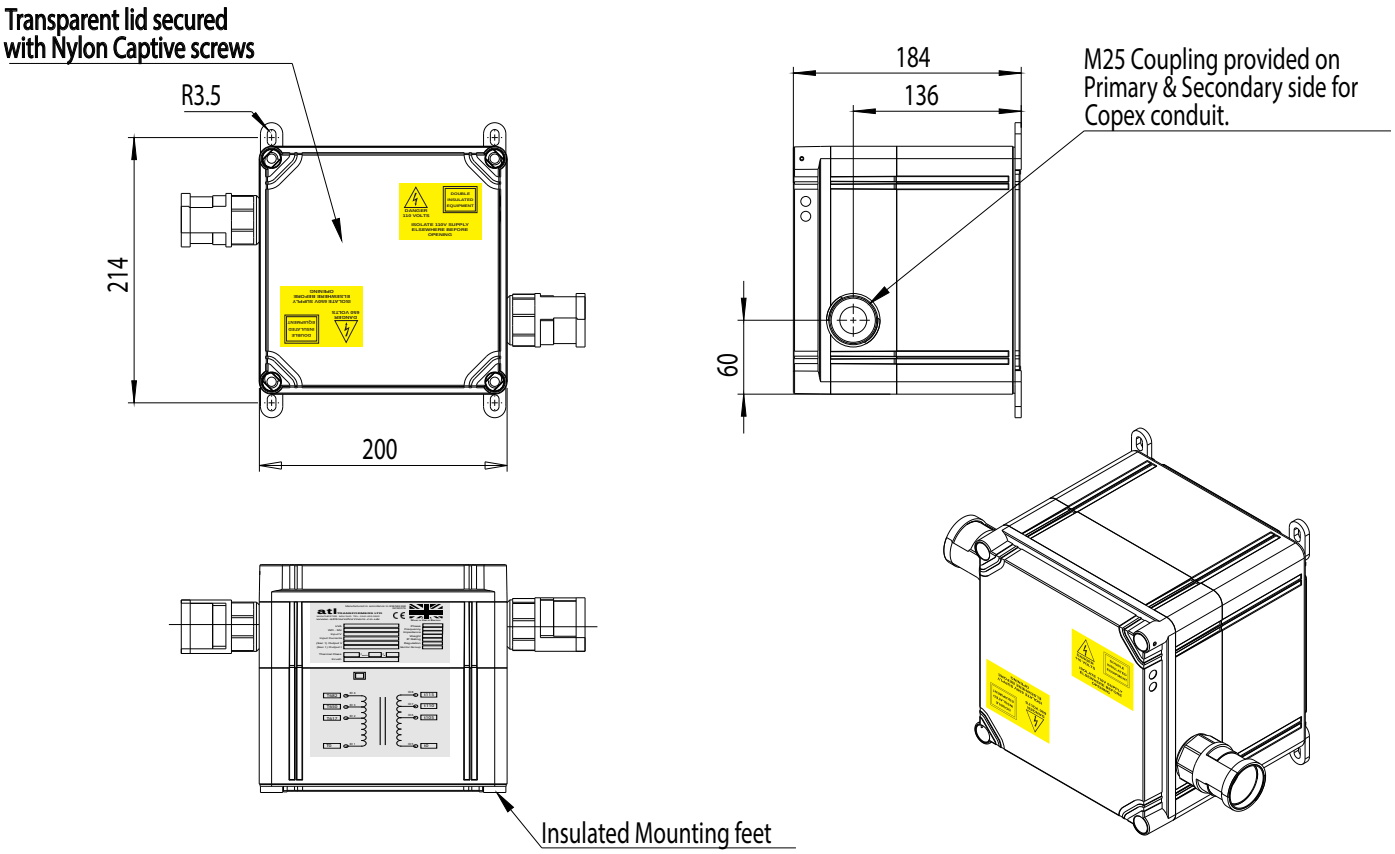

Certificate of Acceptance PA05/06353

Manufacturer:

ATL Transformers Ltd

Issue : 2
Valid From : 07/05/2020
Review date: 06/05/2025

Product: Non-critical Full Class II Isolating Transformers for Auxiliary Circuits

Product Description

Non Critical Full Class II Isolating Transformer for Auxiliary Circuits for use within Class II Switchgear Assemblies to Supply Class II Anti Condensation Heaters and Lighting.

Product Image

Scope of Acceptance

Full acceptance as per the User and Manufacturer's conditions detailed below.

Network Rail Acceptance Panel (NRAP) hereby authorises the product above for use and trial use on railway infrastructure for which Network Rail is the Infrastructure Manager under the ROGS regulations.
Authorised by:

Sam Flint
Product Acceptance Coordinator

Felix Langley
Head of Power Distribution HV/LV

Please contact technologyintroduction@networkrail.co.uk

Network Rail Infrastructure Limited Registered Office: Network Rail, 2nd Floor, One Eversholt Street, London, NW1 2DN Registered in England and Wales No. 2904587 www.networkrail.co.uk

Notes

TRANSFORMERS FOR RAIL
DATASHEET BROCHURE

Our Rail Transformer range consists of;

- Rail Signalling Transformers & Point Drive Rectifiers
- DITA Transformers
- PSP Transformers (IP32 & IP56)
- Auxiliary Circuit Transformers
- Legacy Renewals

ATL, the leading design & manufacturer of small to medium power transformers have been established in the sector for over 35 years. ATL Transformers occupies a modern factory close to the motorway network, employs a dedicated and skilled workforce, and deploys a wealth of experience and the latest advances in materials technology to design, manufacture and test our products in accordance with BS, IEC, Network Rail, UL and CSA Standards.

TRANSFORMERS

+44 (0)161 653 0902

sales@atltransformers.co.uk

Hanson Close, Middleton, Manchester, M24 2HD

www.atltransformers.co.uk

©ATL Transformers Ltd 2024 All Rights Reserved

Document Ref: TECH 151 Issue 15 Date of Issue: 01/02/2024